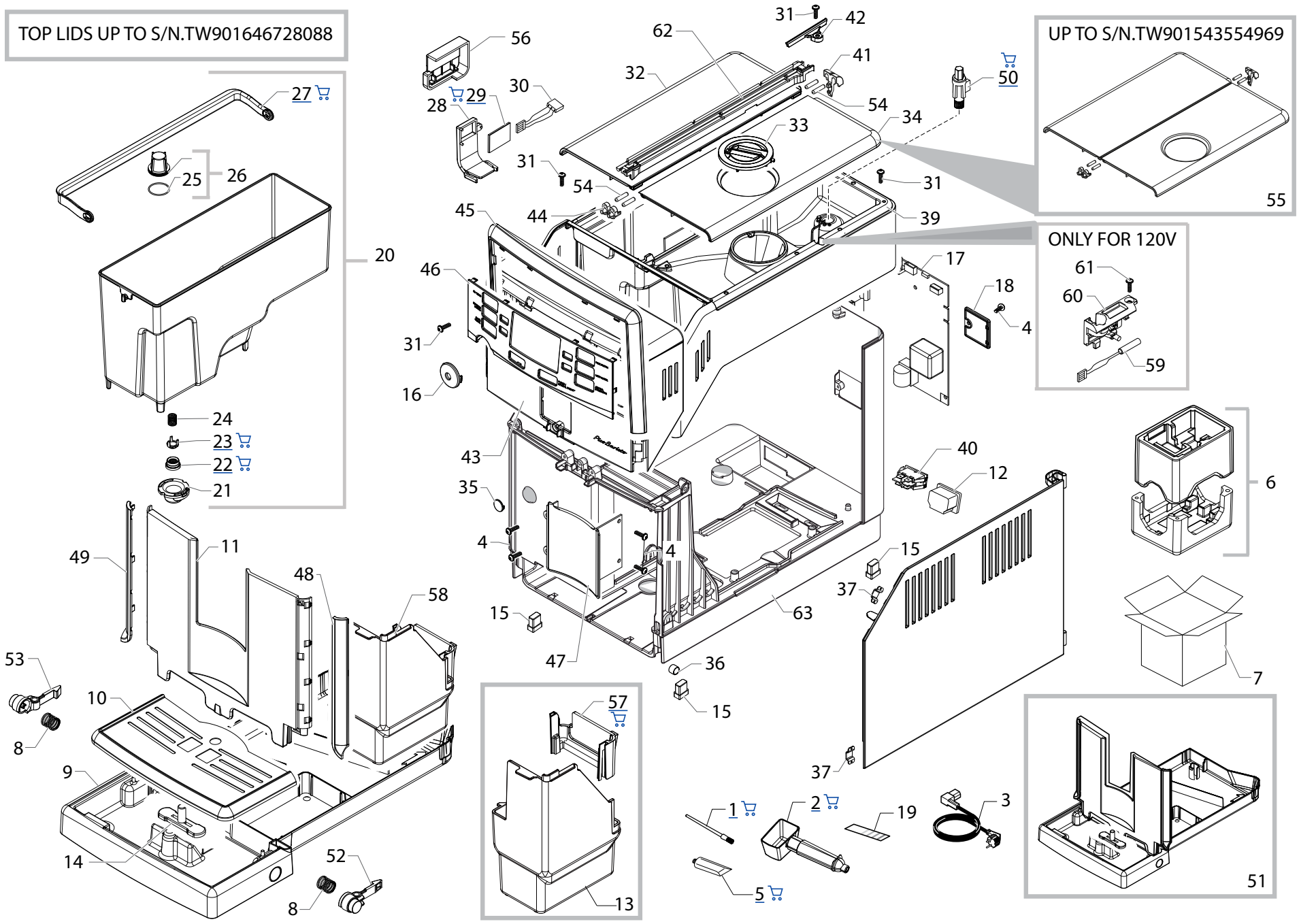

Saeco INTERNATIONAL GROUP

HD8924/01-08
HD8924/09-47

Cod. 882892401010 - 882892408660
Cod. 882892409300 - 882892447540

POS	CODE	12NC	DESCRIPTION	NOTE
01	127390100	996530011867	BRUSH FOR CLEANING	
02		421944033301	BLK ABS COFFEE MEASURE SMART	
03	183911050	996530025808	BLACK POWER CABLE SCHUKO L=1200	
	11004246	996530002166	BLK POWER CABLE TAIWAN HVCTF L=1200	
	183921950	996530025843	POWER CABLE SJT3 USA BLACK UL L=1200	
04	129913202	996530013156	SCREW TCB TORX 10 3X8 PLAST.ZN-B	
05		421946017941	KLUBERLUB NH1 11-222 TUBE 5GR.	
06		421941309051	KIT PS-E INSERT FOR BOX SMRC	
07		421944051962	DISPL.BOX V2 SMRC/P SAE	HD8924/01-08-09
		421946036271	DISPL.BOX SMRC/P SAE USA PICO	HD8924/47
08	11000759	996530000487	HOT WATER TUBE SPRING P124	
09		421944055201	G/BLK DRIP TRAY SMRG/P-H	
10		421944043551	SS GRATE FOR DRIP TRAY SMRG/P-H	
11		421944043651	STEEL DRIP TRAY INSERT SMRG ASSY	
12	12000280	996530007788	CUP SOCKET EN 60320 C 13	
13		421944067551	BLK DUMP BOX V2 SMRG	
			FROM S/N TW901633454059	
14		421941304791	RED/3003 FLOAT FOR DRIP TRAY XSM	
15	17001556	996530073468	TRANSP.SILICONE FOOT SMR	
16	17001025	996530073478	MATT/BLACK FRONT PANEL CAP SMR	
17		421941307411	CPR SMRC/P ASSY.	230V
		421941309801	CPR SMRC/P ASSY.	120V
18	17001484	996530068728	MATT/BLK REAR CASING PROGRAM.INSERT NPR	
19	0301.961	996530039604	STICKER FOR WATER HARDNESS TEST	
20		421944052271	NAT/GRY WATER CONTAINER SMRG/P-H ASSY	
21	17001366	996530073463	BLACK LID FOR DUCKBILL VALVE SMR	
22	11003671	996530001829	TRANSP.VALVE FOR WATER CONTAINER P0049	
23		421941157852	GRY WATER CONTAINER VALVE INSERT P0049	
24	11003672	996530001831	SS SPRING FOR WATER CONTAIN.VALVE P0049	
25	140328461	996530013571	OR ORM 0190-10 EPDM	
26	224640200	996530029115	WHITE WATER CONTAINER EXT.FILTER ASSY.	WITH PART.N°25
27	17001322	996530073442	BLACK WATER CONTAINER HANDLE SMR	
28	17001474	996530073436	BLACK WATER LEVEL SENSOR SUPPORT SMR	
29		421941306721	CPU+SW WATER LEVEL SENSOR V3 ASSY.	
30		421946035161	3P.CONN.WATER LEVEL V2 SMR UL ASSY	
31	12001728	996530070321	SCREW TCBR TORX 10 3,5X12 PLAST.SS	
32		421944043732	SS WATER CONTAINER LID V2 SMRG ASSY	230V
			FROM S/N:TW901543554970 UP TO TW901646728088	
			ALWAYS USED FOR 120V	

POS	CODE	12NC	DESCRIPTION	NOTE
33	11031477	996530073487	TRANSP/GREY GROUND COFFEE HOPPER LID NPR	
34		421944043722	SS BEAN COF.CONT.LID V2 SMRG ASSY	230V
			FROM S/N:TW901543554970 UP TO TW901646728088	
		421944056162	SS BEAN COF.CONT.LID V2 SMRG ASSY	120V
35	11031523	996530073462	BLACK INFRAREDS PLATE RYL	
36	9161.111	996530050555	MAGNET FOR FLOAT SUPERAUT.	
37	11013220	996530069857	STEEL PLATE FOR DOOR MAGNET XSM	
38	17001065	996530073429	MATT/BLACK RIGHT SIDE DOOR SMR	
39		421944044761	DEEP/BLK UPP.CASING COV.SMRC/P-T	230V
			UP TO S/N TW901646728088	
		421944068641	D/BLK UPP.CASING COVER SMRC/P-T	120V
40		242212625104	SWI POW 2P 12A 250V FASTON GP12H B	230V
		242212625106	SWI POW 2P 10A 250V FASTON 8500 B	120V
41		421944056212	DEEP/BLK REAR LID FIXING INSERT V2 SMRG	230V
			FROM S/N:TW901543554970 UP TO TW901646728088	
			ALWAYS USED FOR 120V	
42		421944040451	BLK CONT.SEP.INSERT SMR	230V
			UP TO S/N TW901646728088	
			ALWAYS USED FOR 120V	
43		421944063471	UPP.CAS.COVER INS.S/SCR V2 SMRC/P ASSY	
44		421944056222	DEEP/BLK FRONT LID FIXING INSERT V2 SMRG	230V
			FROM S/N:TW901543554970 UP TO TW901646728088	
			ALWAYS USED FOR 120V	
45		421944051631	CHR.UPPER COVER FRAME SMRC	
46		421944052131	BLK CONTROL PANEL S/SCR.SMRC/P	ONLY FOR USA
		421944072921	BLK CONTROL PANEL HG S/SCR.SMRC/P	NOT FOR USA
47		421944043711	SS LOWER FRONT INSERT SMRG ASSY	
48		421944043801	CHR.LOWER RIGHT FRAME SMRG	
49		421944043791	CHR.LOWER LEFT FRAME SMRG	
50		421944025161	YLW BEAN COFFEE GRINDER INSERT SMR	230V
			UP TO S/N TW901646728088	
			ALWAYS USED FOR 120V	
51		421941308151	KIT SPARES M/BLK DRIP TRAY SMRG/H	
52	17001506	996530073635	BLK DRIP TRAY LOCKING RIGHT INSERT SMR/T	
53	17001507	996530073642	BLK DRIP TRAY LOCKING LEFT INSERT SMR/T	
54		421944061701	SS CYL.PIN D=3.4 L=15.3	230V
			FROM S/N:TW901543554970 UP TO TW901646728088	
			ALWAYS USED FOR 120V	

TOP LIDS FROM S/N.TW901646728089 ONLY FOR 230V

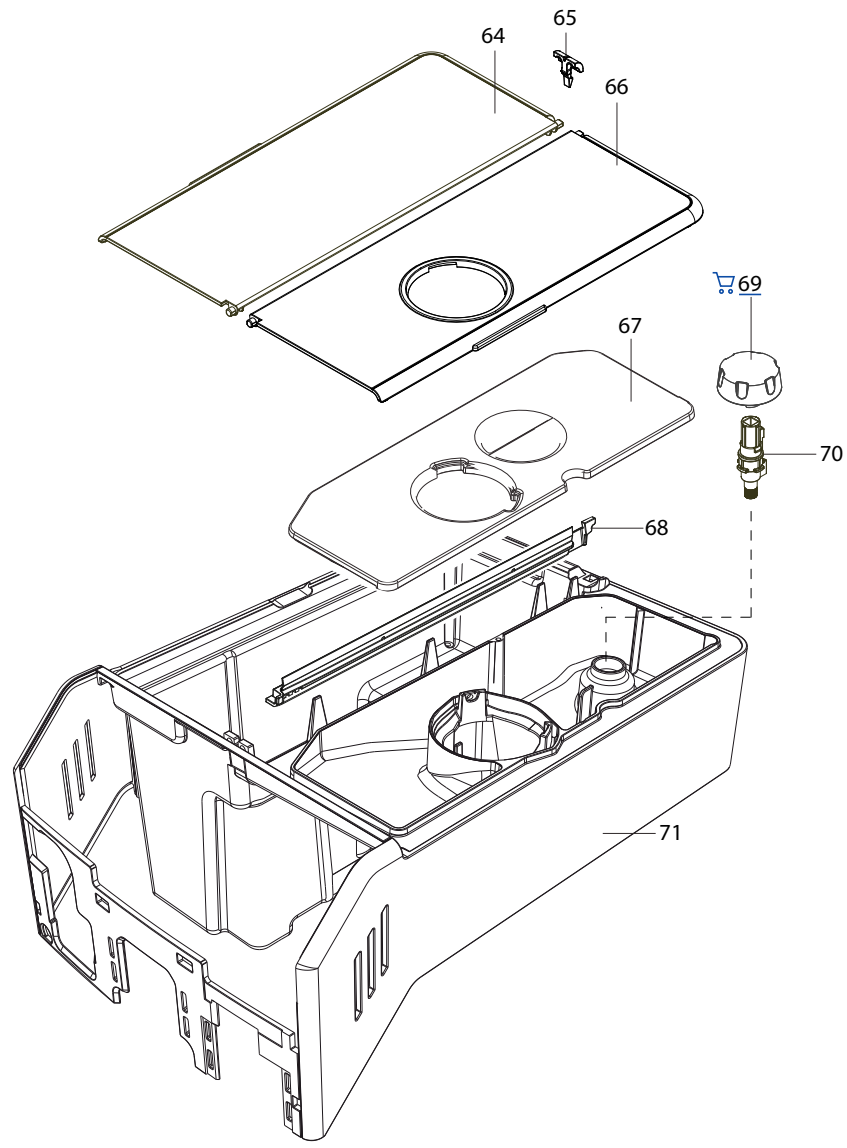

Saeco INTERNATIONAL GROUP

HD8924/01-08
HD8924/09-47

CE

Cod. 882892401010 - 882892408660
Cod. 882892409300 - 882892447540

POS	CODE	12NC	DESCRIPTION	NOTE
55		421941309471	KIT CONTAINERS LIDS (B)	NO HD8924/08-47
			UP TO S/N:TW901543554969	
56		421944006871	GRY WATER LEVEL SENSOR COVER SMR	230V
			UP TO S/N TW901646728088	
			ALWAYS USED FOR 120V	
57		421944063131	BLK DUMP BOX INSERT V2 NPR	
			FROM S/N TW901633454059	
58		421941309971	KIT BLK D.BOX V2 SMRG + D.BOX INS.V2 NPR	
			UP TO S/N TW901633454058	
59	17800442	996530073661	2P.CONN.SENS.REED DUMP BOX CST UL ASSY	120V
60		421944009411	BLK REED SUPPORT SMR	120V
61	12000895	996530007951	SCREW TSP TORX 10 3X10 PLAST.SS	120V
62		421944067621	BLK SEAL CONT.LIDS SMRG	230V
			UP TO S/N TW901646728088	
			ALWAYS USED FOR 120V	
63		421944063691	M/BLK CASING V2 SMRC/P ASSY	
64		421944069181	SS WATER CONTAINER LID V3 SMRG ASSY	230V
			FROM S/N TW901646728089	
65		421944068961	BLK REAR LID FIXING INSERT V3 SMRG	230V
			FROM S/N TW901646728089	
66		421944069191	SS BEAN COF.CONT.LID V3 SMRG ASSY	230V
			FROM S/N TW901646728089	
67		421944070661	TR.INN.BEAN COF.CONT.LID W/SEAL S/SC.SMR	230V
			FROM S/N TW901646728089	
68		421944072821	BLK SEAL CONT.LIDS V2 SMRG	230V
			FROM S/N TW901646728089	
69		421944075151	BLK GRIND.ADJUST.KNOB 10 POS. SMR	230V
			FROM S/N TW901646728089	
70		421944052341	BLW BEAN COFFEE GRINDER INSERT V2 SMR	230V
			FROM S/N TW901646728089	
71		421944068911	M/BLK UPP.CASING COV.V2 SMRC/H-T	230V
			FROM S/N TW901646728089	

POS	CODE	12NC	DESCRIPTION	NOTE

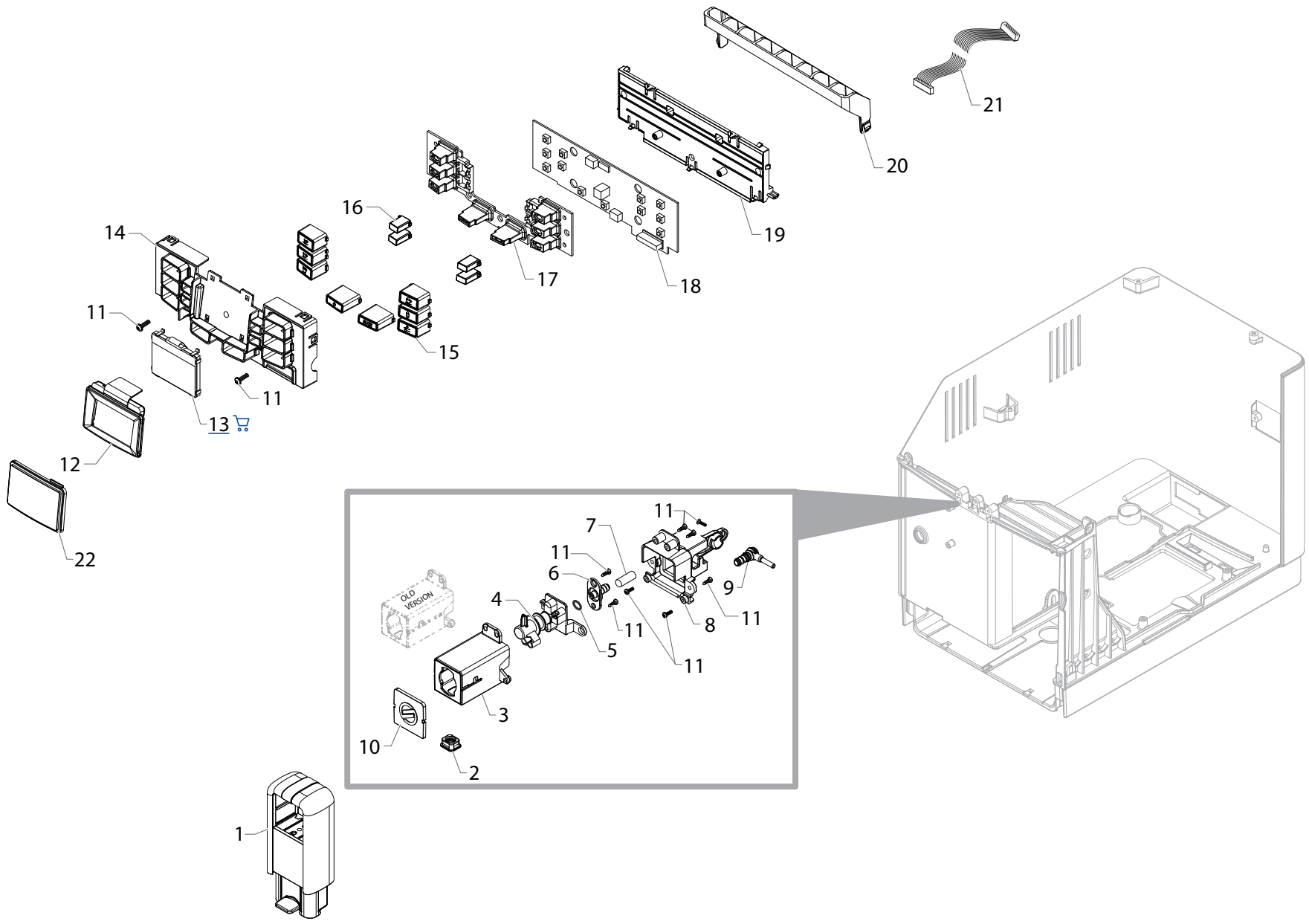

Saeco INTERNATIONAL GROUP

HD8924/01-08
HD8924/09-47

CE

Cod. 882892401010 - 882892408660
Cod. 882892409300 - 882892447540

POS	CODE	12NC	DESCRIPTION	NOTE
01		421944049911	COF.DISPENS.SMRC ASSY	
			UP TO S/N.TW901541525931	
		421944049912	COF.DISPENS.V2 SMRC ASSY	
			FROM S/N.TW901541525932	
02	11013072	996530006604	BLACK SEAL FOR COFFEE DISPENSER MYB9	
03		421944053631	CHROM.COFFEE DISPENSER SUPPORT SMRC	
			UP TO S/N.TW901541525931	
		421944053632	CHROM.COFFEE DISPENSER SUPPORT V2 SMRC	
			FROM S/N.TW901541525932	
04		421944050111	BLACK COFFEE DISPENSER TUBE NO SBS CST	
05	12000070	996530007732	OR ORM 0060-15 SILICONE	
06		421944045202	BLK COFFEE DISPENSER CONNECTOR V2 SMRC	
07	149360200	996530018269	SILICONE TUBE 5X8 70SR	IN ROLL
08		421944045371	BLK BODY ATT.FOR COFFEE DISP.SMRC	
09	17001849	996530073464	BLK BREW UNIT COFFEE OUTLET CONNECT.SMR	
10		421941301241	BLK COF.DISPENS.SUPP.CAP S/SCR.CST/H	
11	12000450	996530007819	SCREW TCBR TORX 10 3,5X12 PLAST.ZN-N	
12		421944046901	BLK DISPLAY SEAL SMRC/P-T	
13		421941307861	DISPLAY HIGO FL	
14		421944045031	BLK DISPLAY SUPPORT SMRC	
15		421944051791	CHR.TOUCH PANEL 8KEYS SMRC/P ASSY	
16		421944051881	BLK TOUCH PANEL 4KEYS S/SCR. SMRC	
17		421944045671	BLK TOUCH PANEL 8KEYS SMRC/T-P	
			UP TO S/N. TW901541526361	
		421944063191	BLK TOUCH PANEL 8KEYS V2 SMRC/T-P	
			FROM S/N. TW901541526362	
18		421941307401	KYB DIGITAL SMRC	
19		421944049741	BLK DISPLAY KEYB.-INTERFACE SUPPORT SMRC	
20		421944034431	BLOCK KEY SUPP. SMRG	
21		421946020421	16P.CPU-USER INTERF.FLATCABLE SMRG	
22		421944046911	TRANSP.GLASS FOR DISPLAY SMRC	

POS	CODE	12NC	DESCRIPTION	NOTE

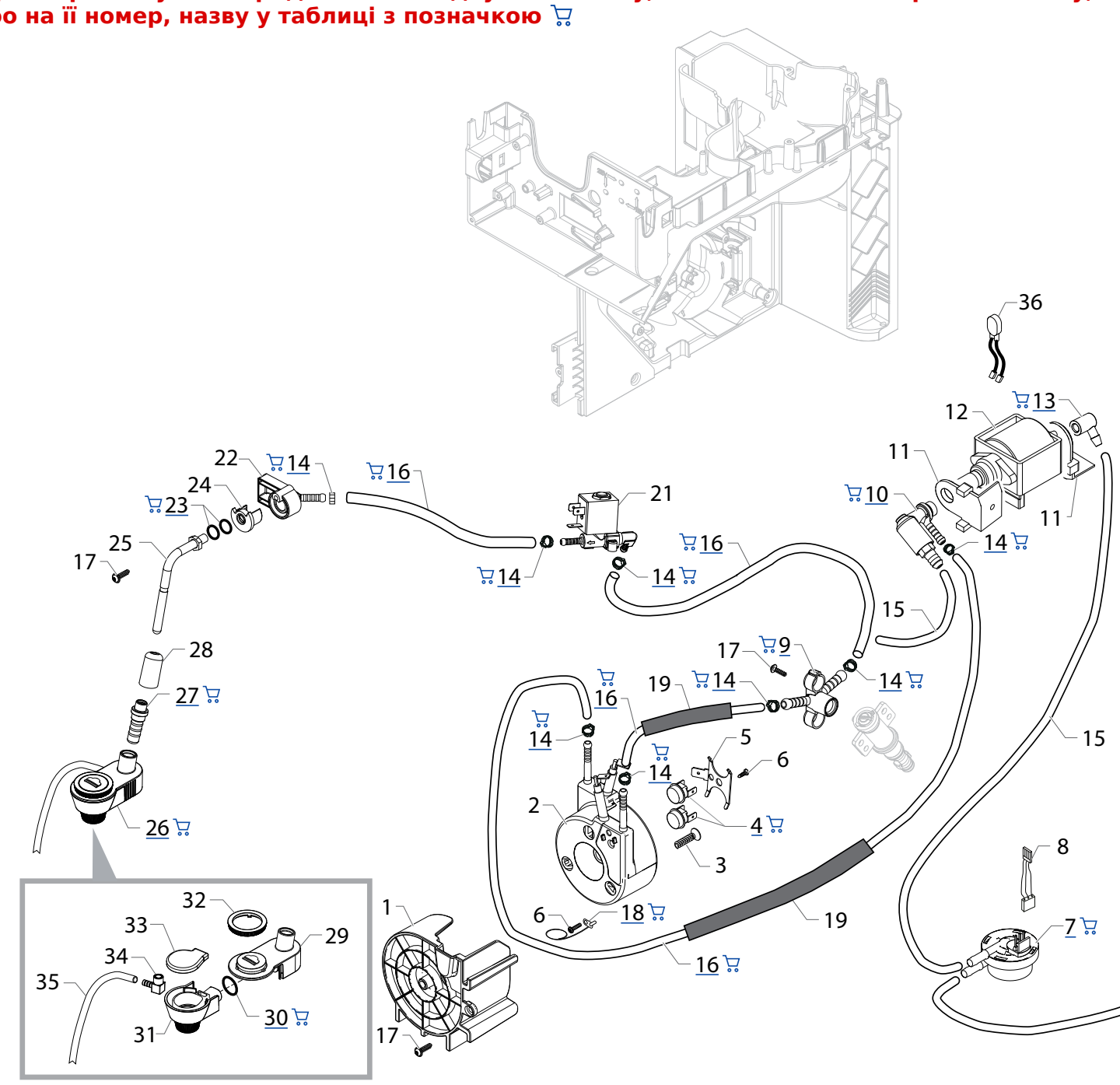

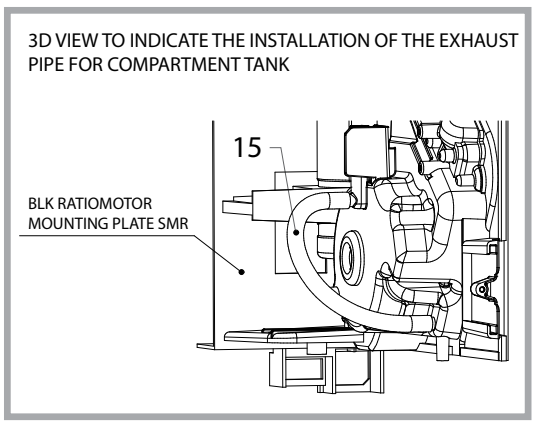

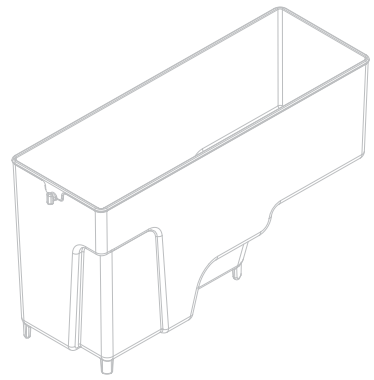

Saeco INTERNATIONAL GROUP

HD8924/01-08
HD8924/09-47

CE

Cod. 882892401010 - 882892408660
Cod. 882892409300 - 882892447540

POS	CODE	12NC	DESCRIPTION	NOTE
01		421944040831	BLK SLIM TUB.BOILER SUPPORT V2 SMR	
02		421944028841	TUB.BOILER XS4 ASSY.	230V - 1900W
		421944046121	TUB.BOILER XS4 ASSY.	120V - 1300W
03	12001280	996530008024	SCREW TSP TORX 10 5X20 PLAST.ZN-B	
04	12001033	996530007973	THERMOSTAT ONE SHOT 190°	
05	11001751	996530000997	TUB.BOILER V3 UPPER THERM.FIXING SPRING	
06	12001715	996530069758	SCREW TCB TORX 20 M4X8 AUTOFORMING ZN-B	
07	NV99.099	996530059843	TURBINE D=1,2 932-8521/00 ASSY.	
08	17800686	996530073488	3POLES CONNECTOR FLOWMETER SMR UL	
09		421941279742	BLK CONNECTOR FOR PIN BOILER V2 SMR	
10	11024863	996530068178	L-F/BR.SAFETY VALVE 16-18 BAR ASSY.	
11	149205850	996530018056	BLACK TYPE ULKA PUMP W/BEVEL SUPPORT	
12		421941305991	ULKA PUMP EP5FMGW	230V-50HZ
	12000142	996530007754	ULKA PUMP EAP5/S	120V-60HZ
13	11002149	996530001186	BLACK PUMP OUTLET 90°CONNECTOR P0049/A	
14	12000892	996530007947	OETIKER CLAMP D=9,5 16700004	
15	JS01.022	996530057357	SILICONE TUBE 5X10 60SH	IN ROLL
16	16000380	996530009505	5X8,9 SILICONE TUBE	IN ROLL
17	12000450	996530007819	SCREW TCBR TORX 10 3,5X12 PLAST.ZN-N	
18	17800628	996530073428	TEMPERATURE SENSOR NTC UL L=550MM	
19	16000540	996530009523	TRANSPAR.11X12,8 SILICONE TUBE	IN ROLL
20	0701.081	996530073439	SPRING FOR TUBE PRODUCT 1	
21		421944029371	SOLENOID VALVES V2 SMR/T 24V ASSY.	
22	17001029	996530073457	STEAM TUBE SUPPORT SMR	
23	140324461	996530013509	OR ORM 0060-20 TERMOIL	
24	17001028	996530073456	BLACK BUSH FOR STEAM TUBE SMR	
25	11030926	996530073447	TF/CHROM.STEAM TUBE SMR ASSY.	
26		421944031491	CHR CAPPUC.V3 SMR/H ASSY.	
27		421941301143	BLK STEAM TUBE INSERT V3 SMR/H	
28		421944031451	CHROMED STEAM TUBE INSERT COVER SMR/H	
29		421944031431	BLK CAPPUC.CASING COV.V3 S/SCR.SMR/H AS.	
30	NM01.028	996530059392	O-RING 106 SILICONE	
31		421944022461	BLK CAPPUC.CASING V3 SMR/H	
32		421941301121	BLK CAPPUC.CASING COVER RING SMR/H	
33		421941301131	BLK CAPPUC.CASING SEAL SMR/H	
34	147922350	996530017377	BLACK CONNECTOR 90° FOR SPHERIC.CAPPUC.	
35	9972.045	996530051237	SILICONE TUBE 3,5X6 L=350 MM DS	

POS	CODE	12NC	DESCRIPTION	NOTE
36	17800635	996530074282	2P.CONN.PUMP SMR UL ASSY.	
		421944046301	GEN.TUB.BOILER XS4 1900W 230V ASSY.	COMPLETE
		421944055941	GEN.TUB.BOILER XS4 GAG 1300W 120V ASSY	COMPLETE

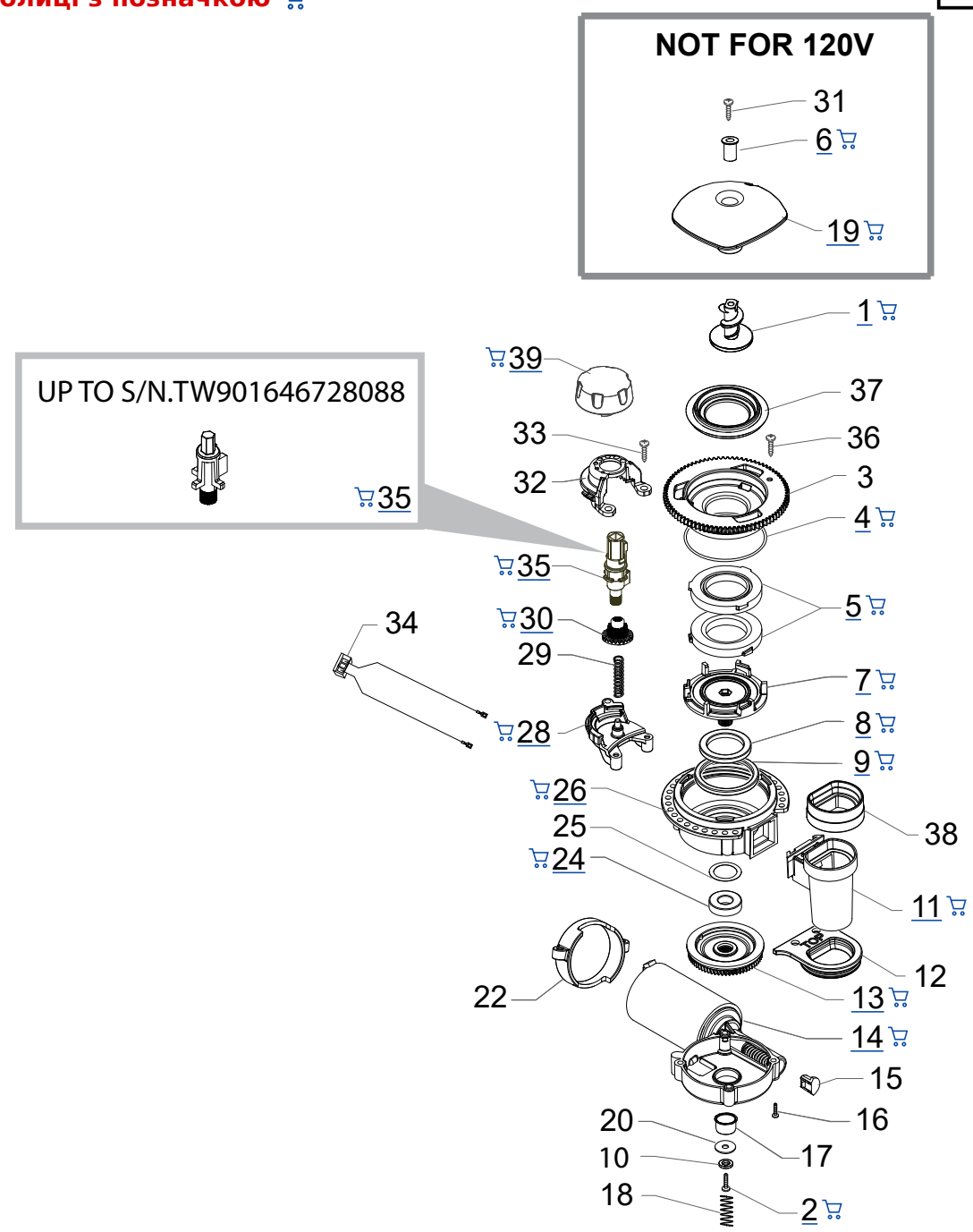

Saeco INTERNATIONAL GROUP

HD8924/01-08
HD8924/09-47

CE

Cod. 882892401010 - 882892408660
Cod. 882892409300 - 882892447540

POS	CODE	12NC	DESCRIPTION	NOTE
01	11010031	996530005586	TEA/ZAMA INCREASE SCREW GRINDER	
02	129574802	996530012928	SCREW TCB TORX 20 M4X30 ZN-B	
03		421944053581	BLK COF.GRINDER UPPER GRINDER SUPPORT V3	
04	140328960	996530013577	OR ORM 0530-15 NBR FDA	
05	146520100	996530016342	BAKED CLAY GRINDER 48X28	
06	11012466	996530006412	BRASS BUSH BEAN CONT.FINGER PROTEC.P0057	
07	149198350	996530017952	BLK LOWER COFFEEGRINDER GRINDER SUPPORT	
08	123030300	996530011183	AXIAL BEARING EKKO 342.35252	
09	140360500	996530013597	FELT RING 45,4X39,4X4	
10	128310402	996530012341	GALV.WASHER UNI 8842 A4	
11	11026355	996530068049	BLK GROUND COFF.OUTLET CONVEYOR V4 ASSY.	
12		421944060561	GRY GROUND COF.CONT.LOWER SEAL V2 SMART1	
13	226000300	996530029609	GEAR SX Z=38 FOR GRINDER MOTION ASSY.	
14		421944049151	MOTOR COFFEEGRINDER V3.2 ASSY.	230V
		421946034991	MOTOR COFFEEGRINDER V3.2 ASSY	120V
15	149214800	996530018139	MC V3 MOD=1,25 WORM SCREW CENTRING CAP	
16	129661702	996530012992	SCREW TCB TORX 3,5X30 PLAST.ZN-B	
17	11002873	996530001389	INSULATOR BUSH FOR GRINDER MOTOR P124	
18	11000597	996530000376	STEEL COF.GRINDER SUPPORT SPRING P124	
19	17001008	996530073467	TRANS.BEAN CONTAIN.FINGER PROTECT.SMR UL	
20	128381902	996530012375	STEEL FLAT WASHER DI=4,3 DE=14 SP=1,5	
22	11000194	996530000115	BLACK COFFEEGRINDER MOTOR SUPPORT P124	
24	123030200	996530011182	RADIAL BEARING 61900.2RS1	
25	128381800	996530012374	STEEL CRINKLE WASHER 21,8X14X0,25	
26	142905450	996530015258	BLK UPPER BODY WITH COFFEE GROUND OUTLET	
28	11002613	996530001314	LOWER COFFEEGRINDER GEAR SUPPORT P124	
29	11002572	996530001308	COFFEEGRINDER REGULATION SPRING P124	
30	11003784	996530001907	COFFEE GRINDING ADJUSTMENT GEAR P0049	
31	U043.004	996530061808	ZN-B TCB TORX 20 M4X16 ZN-B	
32	11002508	996530001296	UPPER COFFEEGRINDER GEAR SUPPORT P124	
33	129914002	996530013165	SCREW TCB TORX 10 3,5X16 PLAST.ZN-B	
34	17800688	996530073454	2POLES CONNET.COFFEEGRINDER MOTOR SMR UL	
35		421944025161	YLW BEAN COFFEE GRINDER INSERT SMR	230V
			UP TO S/N TW901646728088	
			ALWAYS USED FOR 120V	
		421944052341	BLW BEAN COFFEE GRINDER INSERT V2 SMR	ONLY 230V
			FROM S/N TW901646728089	

POS	CODE	12NC	DESCRIPTION	NOTE
36	12001622	996530068586	SCREW TCB TORX B 3,5X9,5 SCHEET NIK	
37		421941085872	COFFEE GRINDER SEAL P119 GRY 7035	
38	145854360	996530015958	BLK GROUND COFFEE CONT.UPPER SEAL SMART1	
39		421944075151	BLK GRIND.ADJUST.KNOB 10 POS. SMR	ONLY 230V
			FROM S/N TW901646728089	
		421944054631	GEN.MOTOR COF.GRINDER V2 SMR/B 230V ASSY	COMPLETE
		421944054651	GEN.MOTOR COF.GRINDER V2 SMR/B 120V ASSY	COMPLETE

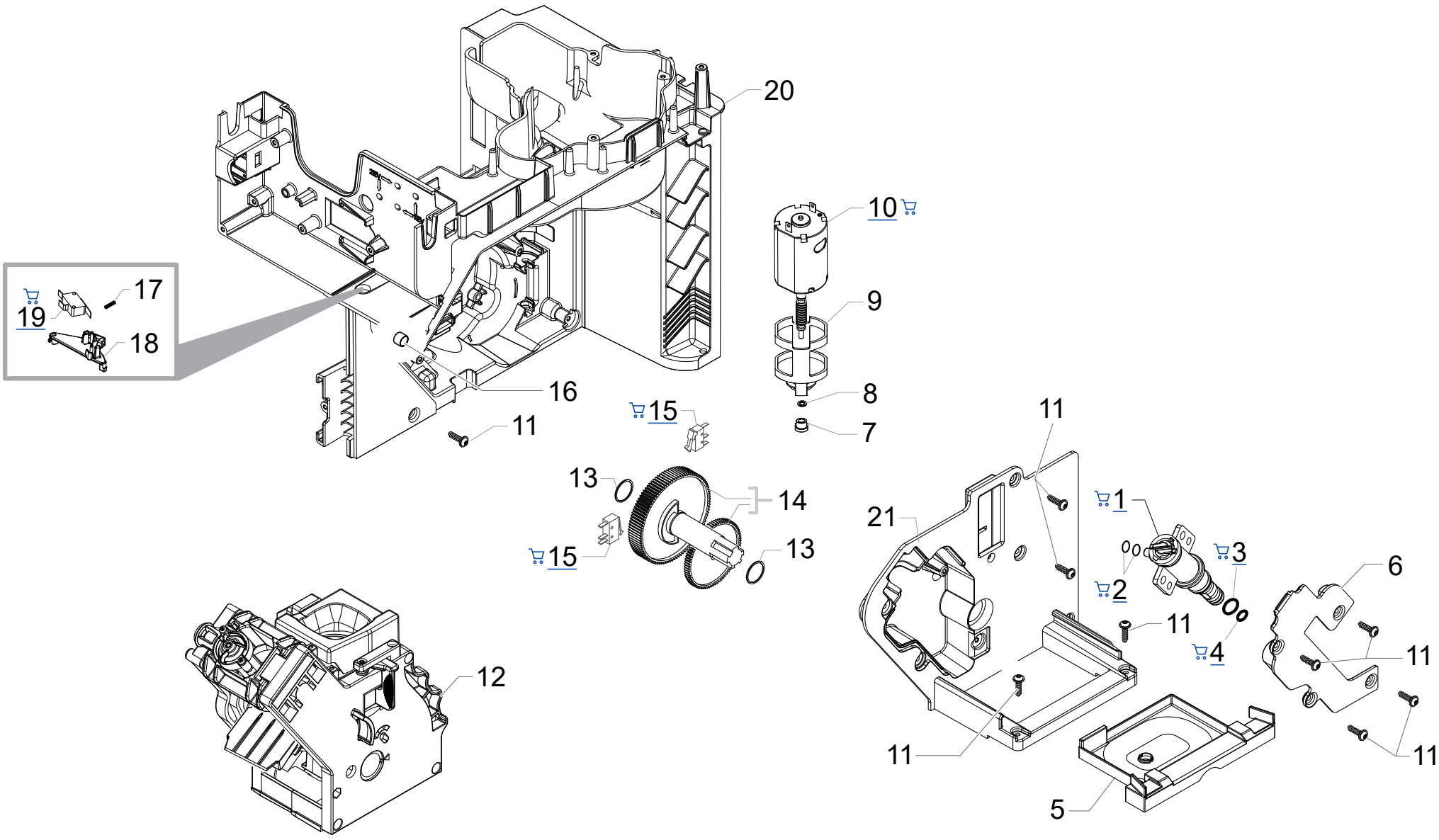

Saeco INTERNATIONAL GROUP

HD8924/01-08
HD8924/09-47

CE

Cod. 882892401010 - 882892408660
Cod. 882892409300 - 882892447540

	POS	CODE	12NC	DESCRIPTION	NOTE
	01		421946011491	BLK PIN FOR BOILER VALVE 4BAR ASSY.	
	02	140328059	996530013564	OR 2015 SILICONE PTFE/FDA	
	03	NM01.035	996530059399	OR ORM 0090-20 SILICONE	
	04	NM01.057	996530059419	OR ORM 0050-20 IN SILICONE	
	05		421944062701	BLK BREW UNIT DRAWER COFFEE V2 SMR	
	06	17000730	996530074054	BLACK BOILER SEAT PIN COVER SMR	
	07	9121.046	996530049898	BRONZE SINTERED BUSH FOR MOTOR RATIOMOT.	
	08	148380200	996530017424	BAKELIZZATE WASHER D=5,5	
	09	9121.044	996530049896	ANTIVIBRATION FOR MOTOR	
	10	11005214	996530002796	MOTOR FOR RATIOMOTOR P124 ASSY.	
	11	12001728	996530070321	SCREW TCBR TORX 10 3,5X12 PLAST.SS	
	12		421944052401	BLK BREW UNIT 8GR.5BAR SMR	
	13	9161.132	996530050569	MYLAR WASHER FOR RATIOMOTOR	
	14	20000900	996530009913	SPARES KIT GEARS FOR RATIOMOTOR V2	
	15		421946025541	MICROSWITCH XC/SM1 V2	
	16	9161.111	996530050555	MAGNET FOR FLOAT SUPERAUT.	
	17		421944006861	STEEL SPRING FOR MICRO COMPENSATOR SMR	
	18	17001508	996530073469	BLACK MICRO COMPENSATOR SMR	
	19	12001890	996530073209	MICROSWITCH XG/V3D	
	20		421944052111	BLK RATIOMOTOR MOUNTING PLATE SMRC ASSY	
	21		421941287512	BLK RATIOMOT.MOUNTING PLATE COVER V2 SMR	

POS	CODE	12NC	DESCRIPTION	NOTE

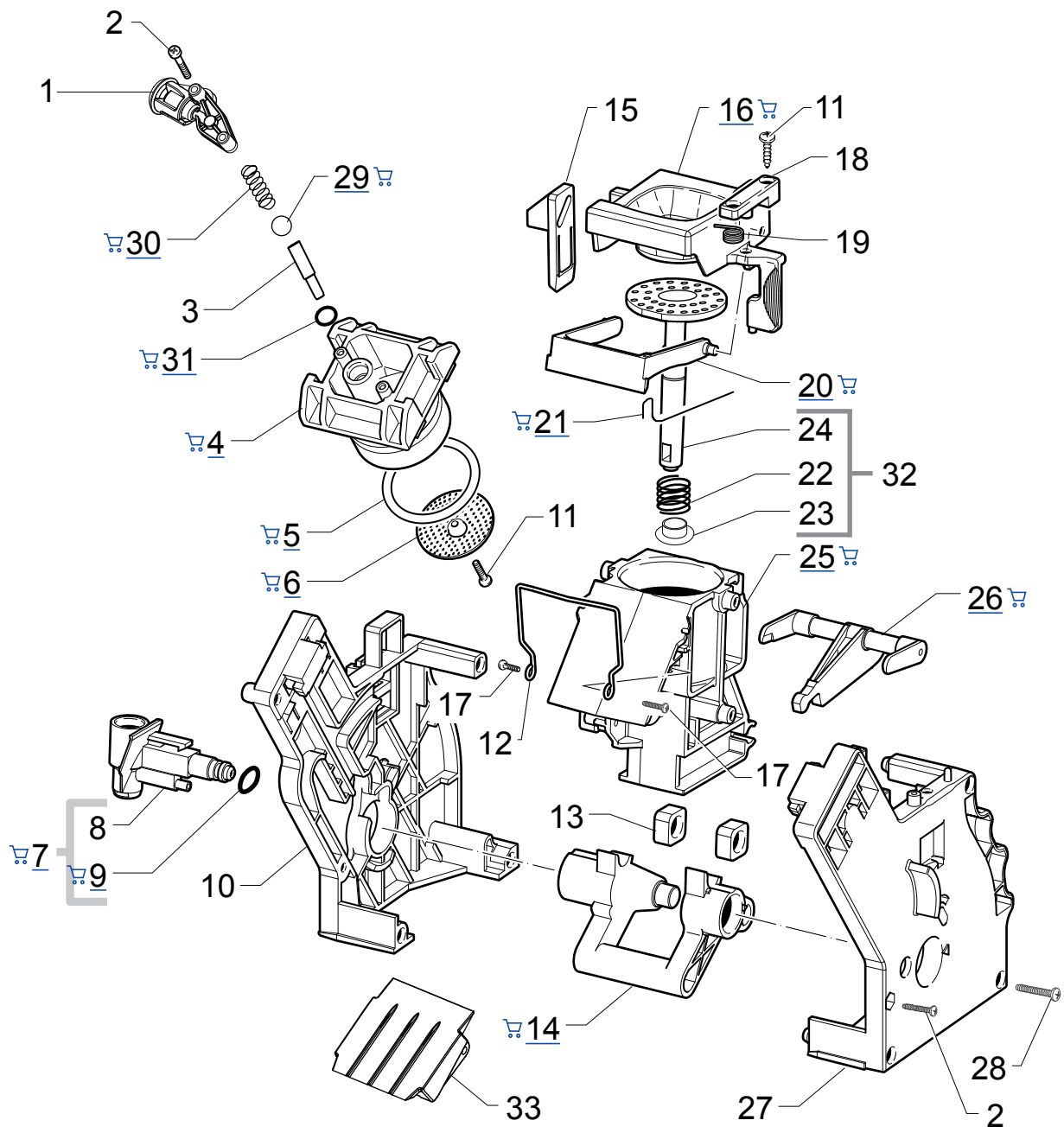

Saeco INTERNATIONAL GROUP

HD8924/01-08
HD8924/09-47

Cod. 882892401010 - 882892408660
Cod. 882892409300 - 882892447540

POS	CODE	12NC	DESCRIPTION	NOTE
01		421944065221	BLK BREW UNIT COF.OUTLET SLEEVE SMR ASSY	
02	12000550	996530007838	SCREW TCB TORX 10 3X25 PLAST.SS	
03	11009276	996530005372	BLK COUNTER PISTON TUBE BREW UNIT S0053	
04	11001840	996530001046	BLACK COUNTER PISTON BREW UNIT 8GR.P124	
05	NM01.044	996530059406	OR ORM 0320-40 SILICONE PTFE/FDA	
06	9161.268	996530050709	PERCOLATOR DE=35,8 ELFO	
07	20000440	996530009825	BLACK WATER INLET SLEEVE BREW UNIT ASSY.	
08	9161.064.050	996530050488	BLACK WATER INLET SLEEVE BREW UNIT ROYAL	
09	NM02.007	996530059441	OR 2025 IN TERMOIL	
10	9161.375.050	996530050832	BLACK BREW UNIT REAR PLATE SMART	
11	12000895	996530007951	SCREW TSP TORX 10 3X10 PLAST.SS	
12	11001556	996530000898	SS BREW UNIT SPRING H=49 SMART	
13	9161.094.050	996530050539	BLACK BREW UNIT DRILLED BLOCK	
14		421944051231	YLW BREW UNIT ELBOW SHAFT M5000	
15		421944046931	YLW BREW UNIT COUPLING PLATE V2 SMART	
16	149261350	996530018241	BLACK HOPPER DOSER BREW UNIT SMART1	
17	129912521	996530013148	SCREW TCBR TORX 10 3,5X14 PLAST.SS	
18		421944050711	YLW BREWUNIT HOPPER BLOCKING PLATE SMART	
19	9161.378	996530050838	SS HOPPER SPRING FOR BREW UNIT SMART	
20	11004161	996530002096	BLACK SCRAPER FOR BREW UNIT M5000	
21	9161.046	996530050455	SS SCRAPER SPRING FOR BREW UNIT	
22	9161.198	996530050627	SS.8GR.BREW UNIT PISTON SPRING	
23	9161.191	996530050618	WHITE 8GR.-12GR.BREW UNIT PISTON BUSH	
24		421944065791	GRY BREW UNIT INTEGR.PISTON 8GR.V3 ASSY	
25		421944014611	BLK COF.CONTAIN.BREW UNIT V2 M5000 ASSY.	
26	11003078	996530001452	BLACK CONNECTING ROD BREW UNIT 8GR.	
27	11005920	996530003228	BLACK BREW UNIT FRONT PLATE S/SCR.SMART	
28	12000897	996530007953	SCREW TCB TORX 10 3,5X20 PLAST.SS	
29		421944034451	BOROSILICATE SPHERE D.5 MM	
30	11012095	996530006305	SS COFFEE UNIT CONTERPISTON SPRING S0053	
31	140328761	996530013575	OR ORM 0060-15 TERMOIL	
32		421944065811	GRY BREW UNIT 8GR.INT.PISTON GEN.V3 ASSY	
33	17000737	996530073426	BLACK BREW UNIT CONVEYOR SLIDE L=56,3	
		421944052401	BLK BREW UNIT 8GR.5BAR SMR	

POS	CODE	12NC	DESCRIPTION	NOTE