0132213057

DE LONGHI "INT/A/RU/SKA/EST/TR" ECAM21.117.SB

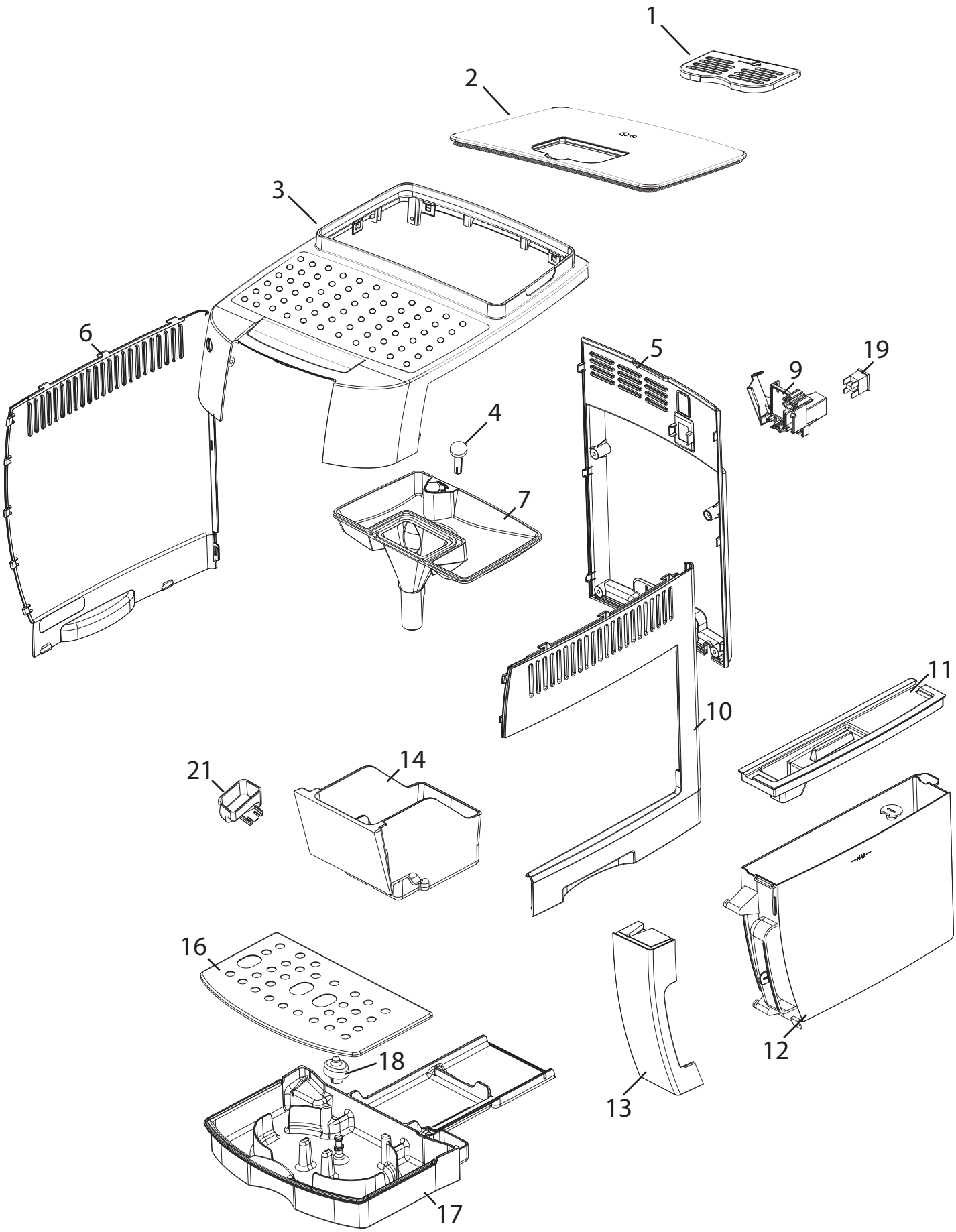

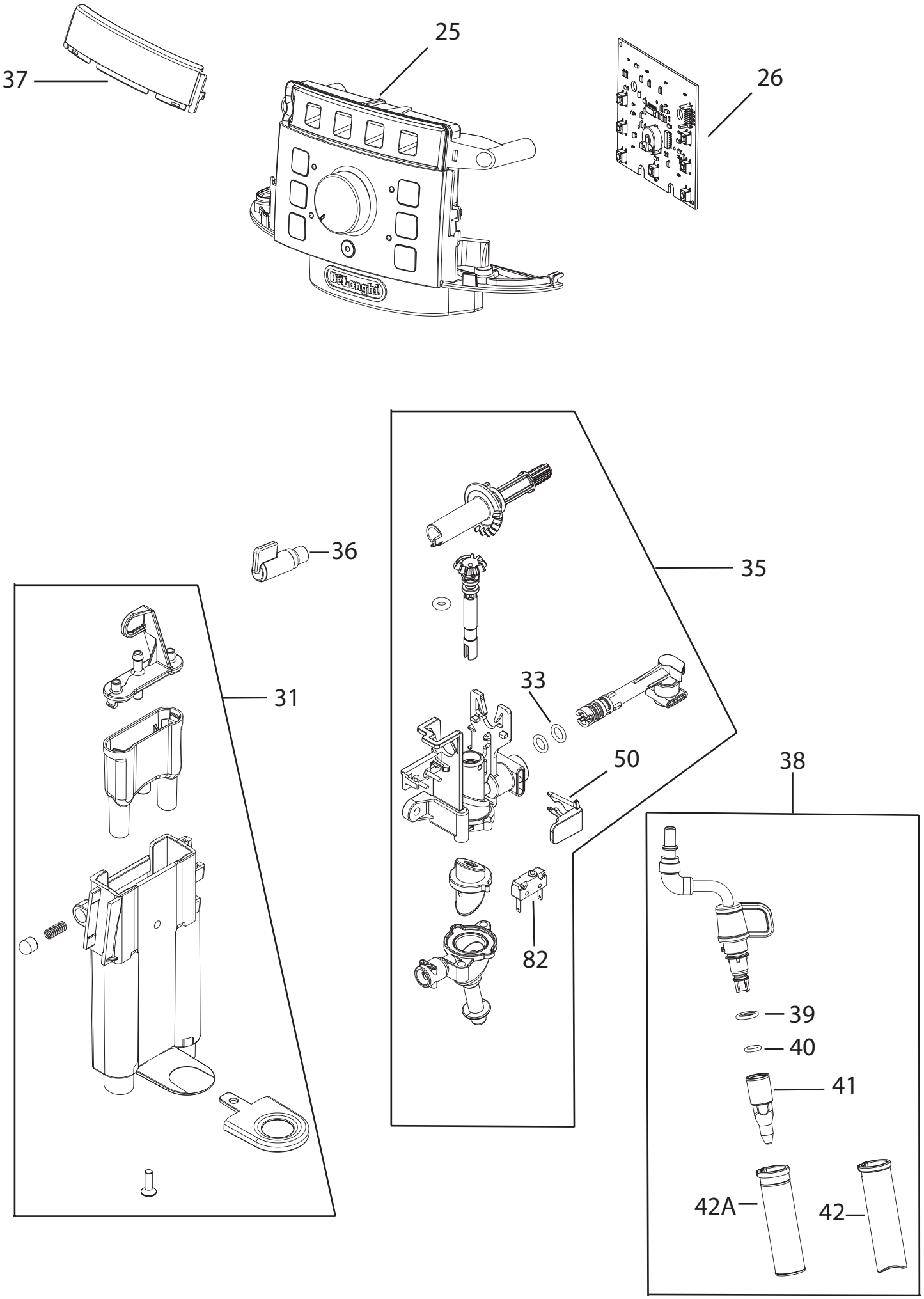
37
25
26
36
35
31
33
50
38
82
39
40
41
42A
42

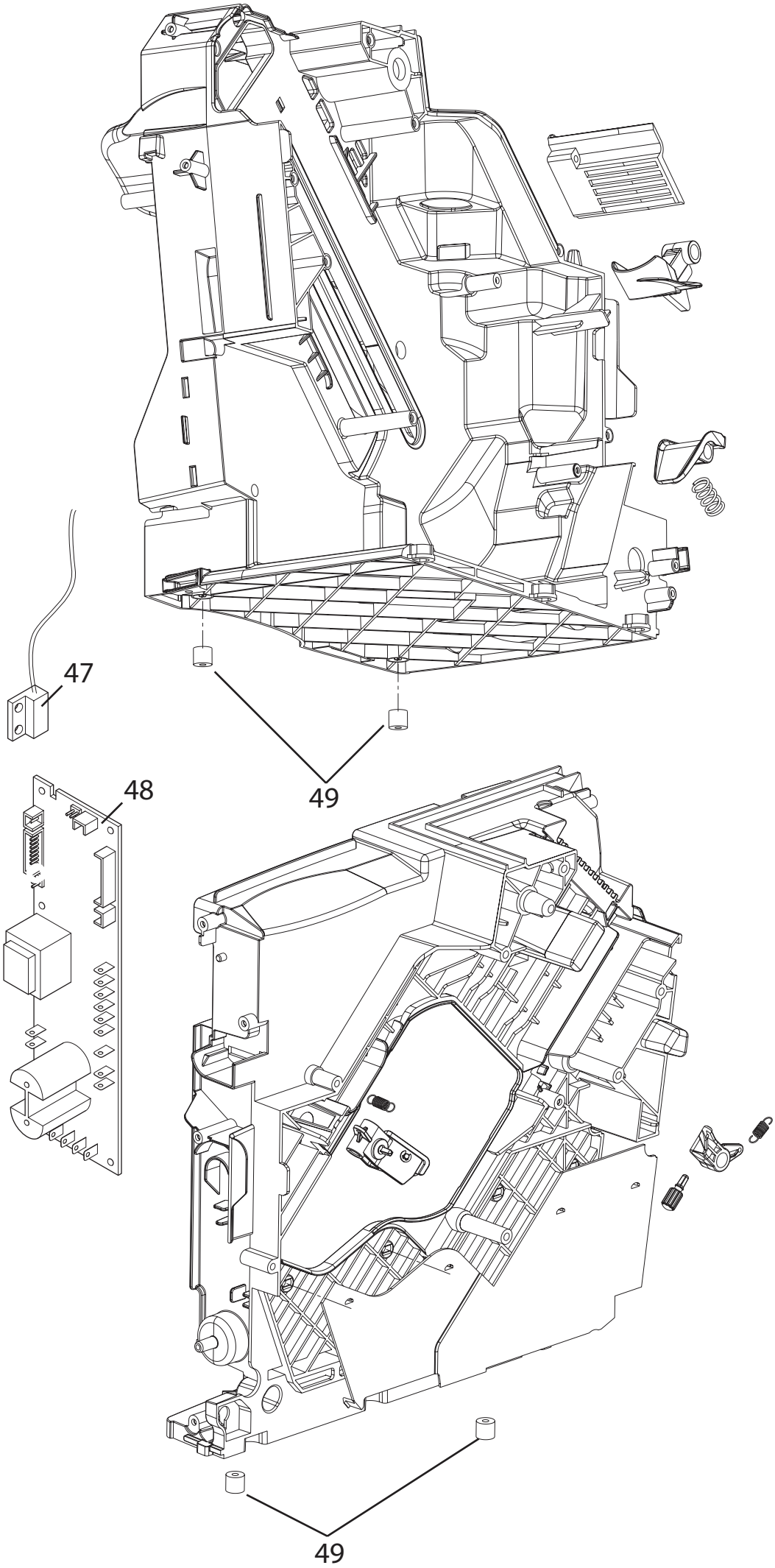
47
48
49
49

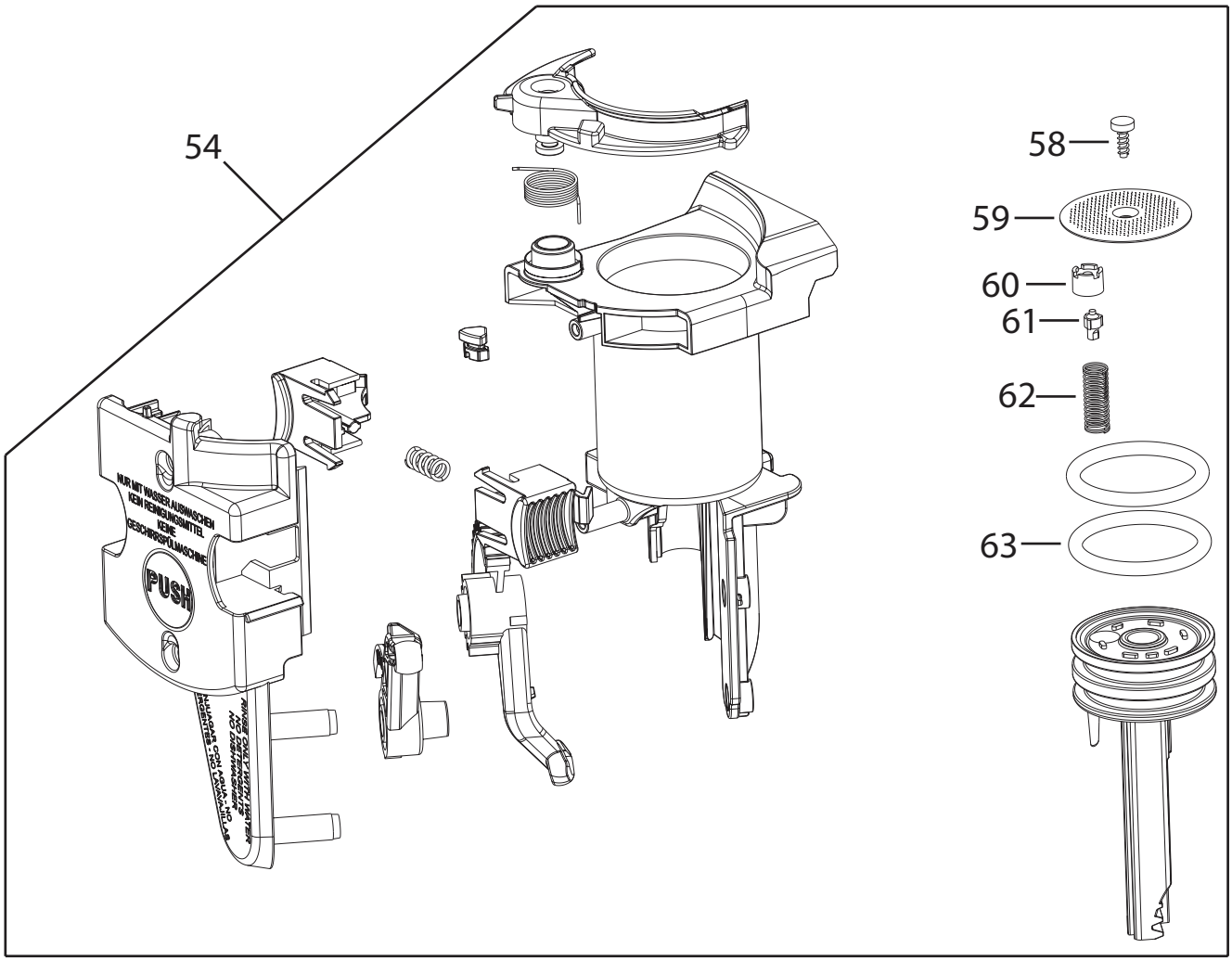
54
58
59
60
61
62
63
NUR MIT WASSER AUSWASCHEN
KEIN REINIGUNGSMITTEL
KEINE
GESCHIRRSPÜLMASCHINE
PUSH
RINSE ONLY WITH WATER
NO DETERGENTS
NO DISHWASHER
NUJUAGAR CON AGUA - NO
ENGENTES - NO LAVAVAJILLAS

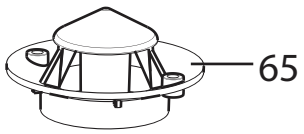
65

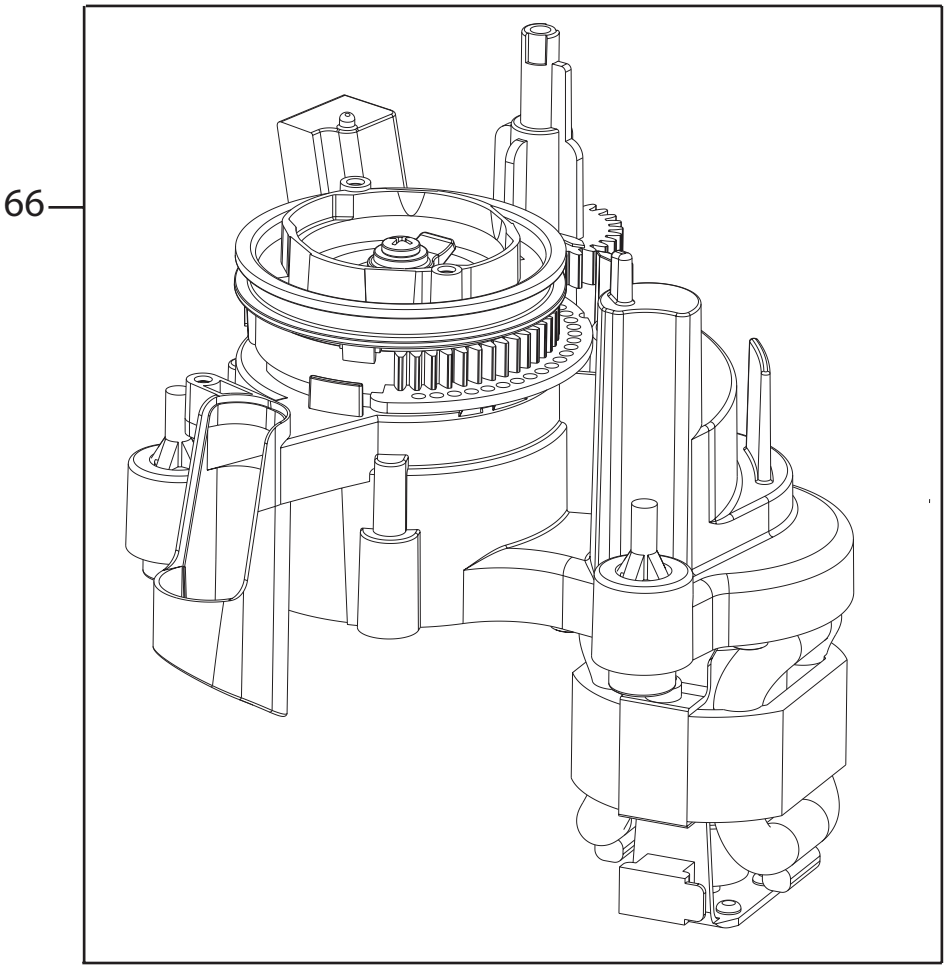
66

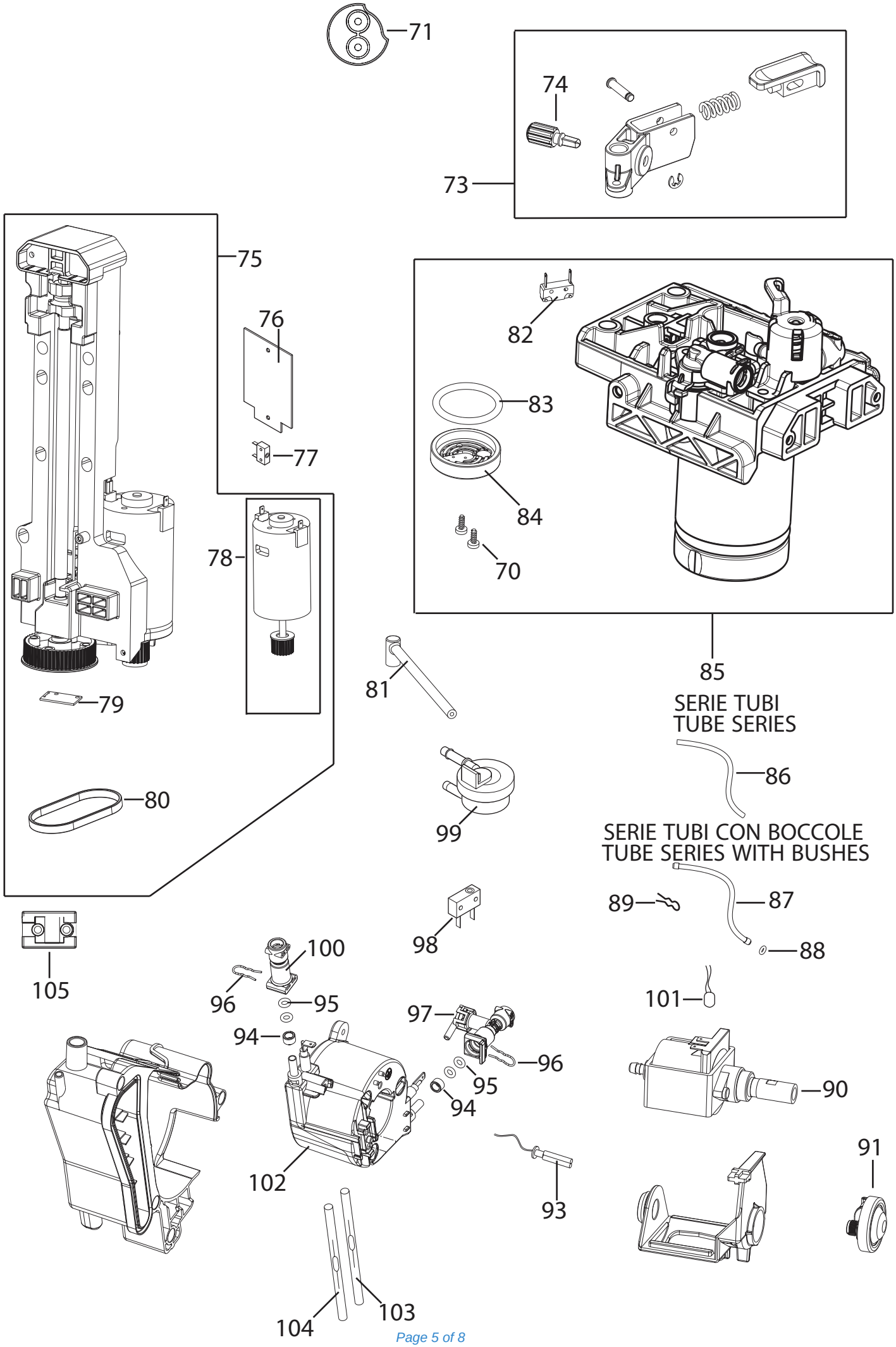
71
74
73
75
76
77
78
79
80
82
83
84
70
85
81
SERIE TUBI
TUBE SERIES
86
99
SERIE TUBI CON BOCCOLE
TUBE SERIES WITH BUSHES
89
87
88
98
105
100
96
95
101
97
94
96
95
94
90
102
93
91
104
103

Position	Code	description
000A	5313213911	COFFEE OUTLET TANK COVER
000B	533135	GASKET (D=7,66 T=1,78)
000C	53132C8134	MEASURING SPOON
000D	AS00006298	TROLLEY
000E	NOCODE04	SEE TECHNICAL BULLETIN
000F	NOCODE04	SEE TECHNICAL BULLETIN
000G	AS13200143	POWER SUPPLY CORD WITH PLUG (SCHUKO)
000H	5313256701	GENERATOR COVER
000I	5313224911	FROTHER GASKET
000J	5332224100	MOTOR BELT
000K	5013251461	WIRING FOR FLOWMETER (L300)
000L	5313213411	DOOR
000M	5513211891	SCRAPER BRUSH WITH BRISTLES
000N	6113210111	FIXING BRACKET (TCO)
000O	6113210121	SENSOR BRACKET
000P	5313219181	GRINDER BELLOW GASKET
000Q	SER0354	GREASE TUBE (5GR VERKOFOOD)
000R	5313213451	COFFEE HOSE CLAMP
000S	AS00006031	GRINDER FINGER STOP RING
000T	IT1000	PORTABLE DIGITAL THERMOMETER (-50°C +150°C)
000U	5013257371	CABLING WITH FUSE FOR GRINDER (1.25A L=450mm)
000V	AS00000378	ECOMULTICLEAN 10ML VIAL
000W	6013211721	PLATE
000Z	AS00010041	FROTHER TUBE
00DD	53132C8177	RUBBER PAD TROLLEY ECAM
001	**53132C7986**	GROUND COFFEE TANK COVER
002	AS00010434	COFFEE BEANS COVER
003	7313222211	CONTROL PANEL ASSEMBLY
004	**AS13200082**	GRIND REGULATION KNOB
005	AS13200121	REAR PANEL
006	AS13200094	LEFT SIDE
007	**AS00001792**	COFFEE BEANS TANK
009	**AS00006115**	SWITCH HOLDER
010	AS00008246	RIGHT SIDE
011	AS00009990	DLS-COVER TANK SMOKE(C8-11)(SAN) ECAM

012		**AS13200250**	TANK
012A		**AS00010091**	WATER TANK
013		**AS13200152**	WATER TANK FRONT PIECE
014		**AS13200103**	COFFEE GROUNDS CONTAINER
016		**AS00010248**	CUP HOLDER
017		**AS13200099**	DRIP TRAY
018		**5313222641**	FLOAT
019		**5132112500**	SWITCH
021		**5313213551**	DRAIN TRAY
025		7313221141	CONTROL PANEL ASSEMBLY WITHOUT BOARD
026		**AS00010040**	PCB LED
031		**AS00008949**	COFFEE DISPENSER
033		5313217741	O-RING (D=6.75 T=1.78)
035		**AS13200086**	STEAM VALVE ASSEMBLY
036		**AS00008493**	DLS-KNOB STEAM CHROMED+SPRING(AISI) ECAM
037		AS13200144	DISPLAY GLASS
038		**AS13200142**	FROTHER
039		53132D0730	O RING
040		**5313217751**	O-RING BLACK (D=6.07 T=1.78)
041		5332169300	LOWER TUBE
042		**AS00008426**	TUBE
047		**AS00008952**	REED SENSOR
048		**5213218521**	POWER BOARD (SW1.4 230V)
049		**532233**	RUBBER PAD
050		5313213841	FROTHER STOP
054		**7313251451**	INFUSER
058		9812631250	SCREW (3.5X12)
059		**6013213181**	FILTER (D.40X2.3 TAI-FENG)
060		**5313277681**	STOPPER
061		**53132C9532**	FROTH DEVICE VALVE NATURAL(PSU)ESAM&ECAM
062		**6132112200**	SPRING
063		**5313238581**	GASKET
065		AS00011592	DLS-COVER SAVE-FINGERS(DL01)BK(POM) ECAM
066		**AS00002955**	GRINDER ASSEMBLY
071		**5313213591**	TROLLEY SLEWING RING
073		7313295821	COMPENSATION SYSTEM

074		**5313213431**	GASKET
075		**5513228021**	TRANSMISSION ASSEMBLY (ECM 230V)
076		**AS00008306**	DLS-PCB FILTER MOTOR(GDS-CN)230V ECAM
077		**5132110500**	MICROSWITCH (250V 85°)
078		**7313217261**	MOTOR WITH PULLEY (ECM 230V)
079		**AS00005457**	HALL SENSOR
080		**AS00009034**	TOOTHED BELT
081		**5313236711**	RIGHT ANGLE WATER OUTLET TUBE (90° L=190)
082		**5132104100**	MICROSWITCH (250V 85°)
084		5313217601	BLACK FILTER
085		**5513227961**	MECHANICS VALVE (DLS ECAM)
086A		5313217861	TUBE (DI=3 DE=5,5 L145)
086B		5313217871	TUBE (DI=3 DE=6 L200)
086C		5313283891	TUBE
087A		5513212871	TUBE WITH 2 BUSHES (L97)
087B		5513212881	TUBE WITH 2 BUSHES (L270)
087C		5513212891	TUBE WITH 2 BUSHES (L230)
087D		5513212901	TUBE WITH 2 BUSHES (L290)
088		**5313217701**	O-RING (D=3.85 T=2)
089		**6132101300**	SPRING
090		**5113270613**	PUMP (230V)
091		**55132A1659**	FLOW REGULATOR
093		5213211181	SENSOR (NTC)
094		**5332239300**	SPACER
095		**5313228791**	GENERATOR GASKET
096		**6113213191**	CLIP (WIRE 1,2 AISI302)
097		**7313219401**	SAFETY VALVE
098		**5113210211**	MICROSWITCH
099		**5213225251**	FLOWMETER
100		**5332239200**	CONNECTOR
101		5213270872	THERMAL PROTECTOR
102		**5513236251**	BOILER (230V)
103		5013251391	TCO WITH WIRING
104		5013251401	TCO WITH WIRING
105		**5513214661**	CAM SLIDER