Exp.E74213 Rev.15 - 09/07/18

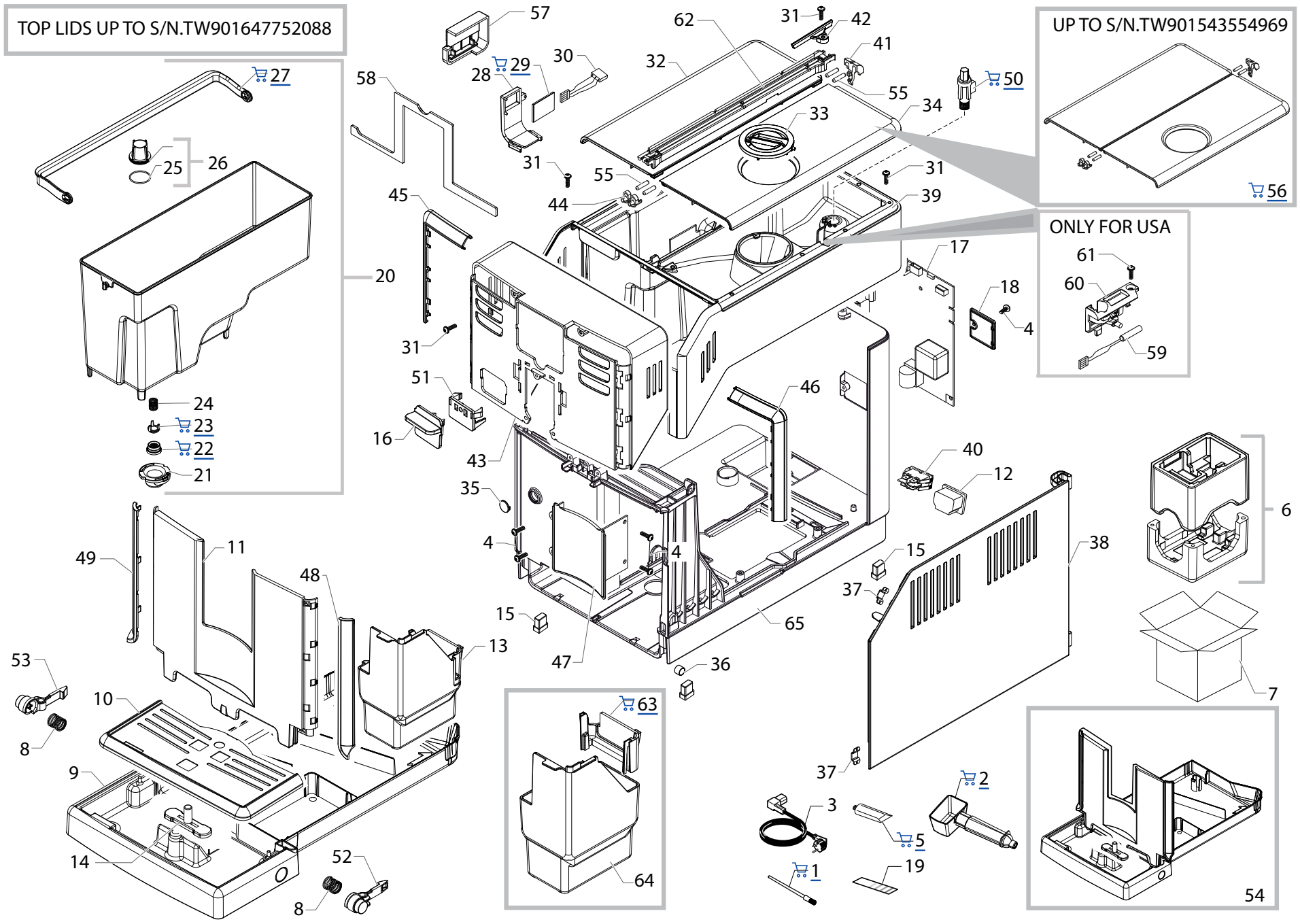

Saeco INTERNATIONAL GROUP

HD8916/01-09-19
HD8917/01-03-09-47-48
HD8918/09-21-31-41
HD8919/51-55-59

Cod.882891601010 - 609300 - 619870
Cod.882891701010 - 701620 -703530 - 709300 - 747520 - 748520
Cod.882891809870 - 821010 - 831220 - 841220 - 841300
Cod.882891951010 - 955220 - 959300-959870

POS	CODE	12NC	DESCRIPTION	NOTE
01	127390100	996530011867	BRUSH FOR CLEANING	
02		421944033301	BLK ABS COFFEE MEASURE SMART	
03	183911050	996530025808	BLK POWER CABLE SCHUKO L=1200	
	183940650	996530025872	BLK POWER CABLE AUSTRALIA L=1200	
	183921950	996530025843	BLK POWER CABLE SJT3 USA UL L=1200	
04	129913202	996530013156	SCREW TCB TORX 10 3X8 PLAST.ZN-B	
05		421946017941	KLUBERLUB NH1 11-222 TUBE 5GR.	
06		421941308001	KIT PS-E INSERT FOR BOX SMRG	
07		421946025851	DISPL.BOX SMRG/T SAE INCANTO	
			HD8917/01-03-09 HD8918/09	
		421946035181	DISPL.BOX SMRG/T SAE INCANTO OTC CHM	
			HD8916/01-09-19 HD8918/21-31-41	
		421946035211	DISPL.BOX SMRG/T US SAE INCANTO	HD8917/47-48
08	11000759	996530000487	HOT WATER TUBE SPRING P124	
09		421944052811	G/ANM DRIP TRAY SMRG/T-TE ASSY	
			HD8919/51-55-59	
		421944056171	G/BLK DRIP TRAY SMRG/T ASSY	
			ALL EXCEPT HD8919/51-55-59	
10		421944070441	COATED SS GRATE FOR DRIP TRAY SMRG/T	
11		421944043651	DRIP TRAY INSERT SMRG/H ASSY	
			HD8917/01-03-09-47-48 HD8918/09	
		421944034801	DEEP/BLK DRIP TRAY INSERT SMRG/P	
			HD8916/01-09-19 HD8918/21	
		421944051331	G/ANM DRIP TRAY INSERT SMRG/TE	HD8918/41
		421944072111	SIL DRIP TRAY INSERT SMRG/P	HD8918/31
			UP TO S/N TW901722000000	
		421944074151	M/SIL DRIP TRAY INSERT SMRG/P	HD8918/31
			FROM S/N TW901722000001	
12	12000280	996530007788	CUP SOCKET EN 60320 C 13	
13		421941309971	KIT BLK D.BOX V2 SMRG + D.BOX INS.V2 NPR	
			UP TO S/N TW901633454058	
		421944067551	BLK DUMP BOX V2 SMRG	
			FROM S/N TW901722000001	
14		421941304791	RED/3003 FLOAT FOR DRIP TRAY XSM	
15	17001556	996530073468	TRANSP.SILICONE FOOT SMR	
16		421944052361	CHRM.COVER FOR CARAFE HOLE SMRG	
17		421941310371	CPR SMRG/T ASSY (REV02)	
		421941308391	CPR GAG SMRG/T ASSY.	HD8917/47
		421941311191	CPR GAG SMRG_V2/T 120V ASSY.	HD8917/48
18	17001484	996530068728	MATT/BLK REAR CASING PROGRAM.INSERT NPR	

POS	CODE	12NC	DESCRIPTION	NOTE
19	0301.961	996530039604	STICKER FOR WATER HARDNESS TEST	
20		421944052271	NAT/GRY WATER CONTAINER SMRG/P-H ASSY	
21	17001366	996530073463	BLACK LID FOR DUCKBILL VALVE SMR	
22	11003671	996530001829	TRANSP.VALVE FOR WATER CONTAINER P0049	
23		421941157852	GRY WATER CONTAINER VALVE INSERT P0049	
24	11003672	996530001831	SS SPRING FOR WATER CONTAIN.VALVE P0049	
25	140328461	996530013571	OR ORM 0190-10 EPDM	
26	224640200	996530029115	WHITE WATER CONTAINER EXT.FILTER ASSY.	WITH PART.N°25
27	17001322	996530073442	BLACK WATER CONTAINER HANDLE SMR	
28	17001474	996530073436	BLACK WATER LEVEL SENSOR SUPPORT SMR	
29		421941306721	CPU+SW WATER LEVEL SENSOR V3 ASSY.	
30		421946035161	3P.CONN.WATER LEVEL V2 SMR UL ASSY	
31	12001728	996530070321	SCREW TCBR TORX 10 3,5X12 PLAST.SS	
32		421944043732	SS WATER CONTAINER LID V2 SMRG ASSY	230V
			FROM S/N:TW901543554970 UP TO TW901647752088	
			HD8917/01-03-09 HD8918/09	
			ALWAYS USED FOR 120V HD8917/47-48	
		421944036032	DEEP/BLK WATER CONTAINER LID V2 SMRG/P	230V
			FROM S/N:TW901543554970 UP TO TW901647752088	
			HD8916/01-09-19 HD8918/21-31-41	
33	11031477	996530073487	TRANSP/GREY GROUND COFFEE HOPPER LID NPR	
34		421944043722	SS BEAN COF.CONT.LID V2 SMRG ASSY	230V
			FROM S/N:TW901543554970 UP TO TW901647752088	
			HD8917/01-03-09 HD8918/09	
		421944035972	DEEP/BLK BEAN COF.CONT.LID V2 SMRG/P	
			FROM S/N:TW901543554970 UP TO TW901647752088	
			HD8916/01-09-19 HD8918/21-31-41	
		421944056162	SS BEAN COF.CONT.LID V2 SMRG 120V ASSY	REV.03 HD8917/47-48
35	11031523	996530073462	BLACK INFRAREDS PLATE RYL	
36	9161.111	996530050555	MAGNET FOR FLOAT SUPERAUT.	
37	11013220	996530069857	STEEL PLATE FOR DOOR MAGNET XSM	
38	17001065	996530073429	MATT/BLACK RIGHT SIDE DOOR SMR	
39		421944033071	BLK UPP.CASING COV.SMRG	230V
			UP TO TW901647752088	
		421944059171	BLK UPP.CASING COV.W/SENS.SMRG	HD8917/47-48
40		242212625104	SWI POW 2P 12A 250V FASTON GP12H B	
		242212625106	SWI POW 2P 10A 250V FASTON 8500 B	HD8917/47-48
41		421944056212	DEEP/BLK REAR LID FIXING INSERT V2 SMRG	230V
			FROM S/N:TW901543554970 UP TO TW901647752088	
			ALWAYS USED FOR 120V HD8917/47-48	

Щоб переглянути та придбати необхідну запчастину, натисніть на її номер на малюнку, або на її номер, назву у таблиці з позначкою

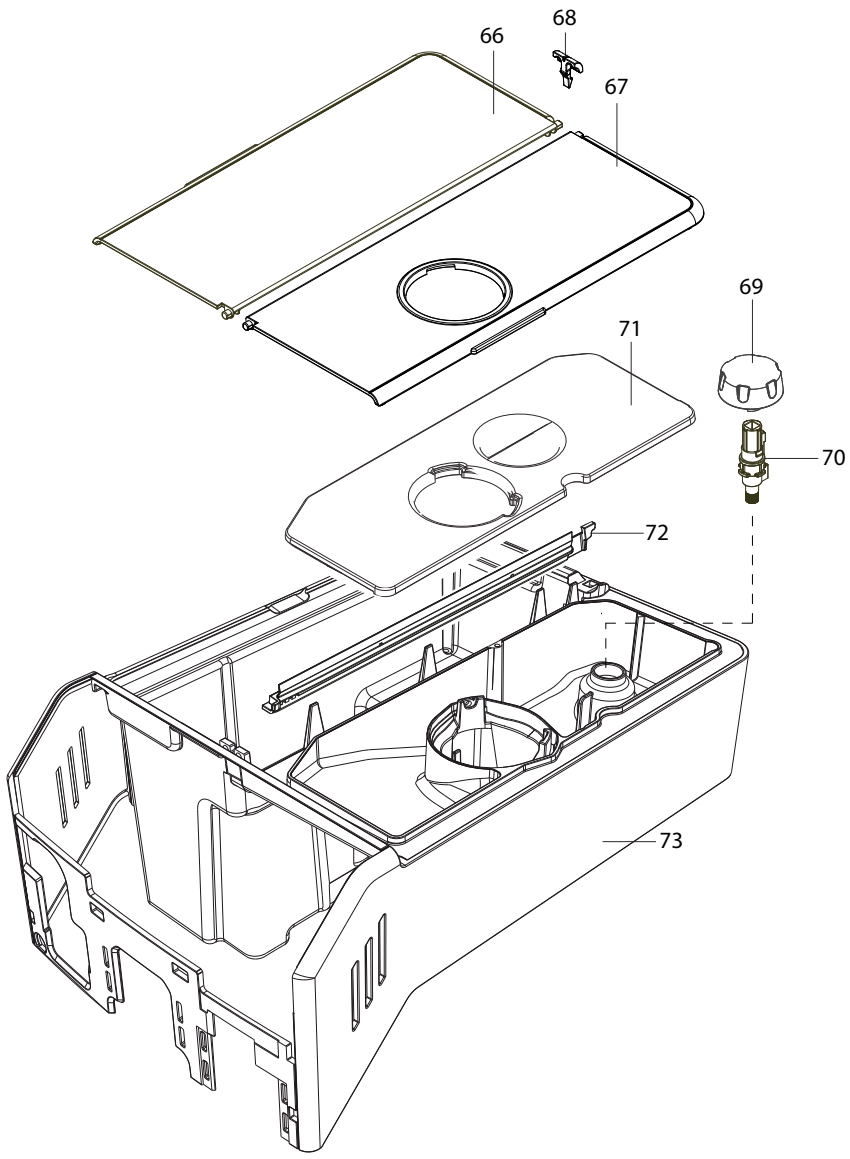

Saeco INTERNATIONAL GROUP

HD8916/01-09-19
HD8917/01-03-09-47-48
HD8918/09-21-31-41
HD8919/51-55-59

Cod.882891601010 - 609300 - 619870
Cod.882891701010 - 701620 -703530 - 709300 - 747520 - 748520
Cod.882891809870 - 821010 - 831220 - 841220 - 841300
Cod.882891951010 - 955220 - 959300-959870

POS	CODE	12NC	DESCRIPTION	NOTE
42		421944040451	BLK CONT.SEP.INSERT SMR	
43		421944055211	UPP.CAS.COVER INS.S/SCR SMRG/T ASSY	
			HD8917/01-03-09-47-48 HD8918/09	
43		421944062591	BLK UPP.CAS.COVER INS.S/SCR SMRG/TE	
			HD8916/01-09-19 HD8918/21	
		421944050021	G/ANM UPP.CASING COV.INS.S/SCR.SMRG/TE	HD8918/41
		421944072211	G/SIL UPP.CASING COV.INS.S/SCR.SMRG/TE	HD8918/31
			UP TO S/N TW901722000000	
		421944080191	M/SIL UPP.CASING COV.INS.S/SCR.SMRG/TE	HD8918/31
			FROM S/N TW901722000001	
44		421944056222	DEEP/BLK FRONT LID FIXING INSERT V2 SMRG	230V
			FROM S/N:TW901543554970 UP TO TW901647752088	
			ALWAYS USED FOR 120V HD8917/47-48	
45		421944043781	CHR.UPPER LEFT FRAME SMRG	
46		421944043771	CHR.UPPER RIGHT FRAME SMRG	
47		421944043711	SS LOWER FRONT INSERT SMRG/H ASSY	
			HD8917/01-03-09-47 HD8918/09	
		421944036371	DEEP/BLK CASING INSERT SMRG/P	
			HD8916/01-09-19 HD8918/21	
		421944051361	G/ANM CASING INSERT SMRG/TE	HD8918/41
		421944072131	NOT AVAILABLE UP TO S/N TW901722000000	HD8918/31
			SEE POS 11-43-47 FROM SN TW901722000001	
		421944074171	M/SIL CASING INSERT SMRG/P	HD8918/31
			FROM SN TW901722000001	
48		421944043801	CHR.LOWER RIGHT FRAME SMRG	
49		421944043791	CHR.LOWER LEFT FRAME SMRG	
50		421944025161	YLW BEAN COFFEE GRINDER INSERT SMR	
51		421944052001	CARAFE HOLE PLUG INSERT SMRG/T-TE	
52	17001506	996530073635	BLK DRIP TRAY LOCKING RIGHT INSERT SMR/T	
53	17001507	996530073642	BLK DRIP TRAY LOCKING LEFT INSERT SMR/T	
54		421941310101	KIT SPARES TIT DRIP TRAY SMRG/T	
			HD8917/01-03-09-47 HD8918/09	
		421941310161	KIT SPARES DEEP/BLK DRIP TRAY SMRG/P	
			HD8916/01-09-19 HD8918/21	
		421941310021	KIT SPARES G/ANM DRIP TRAY SMRG/TE	HD8918/41
		421941310201	KIT SPARES SIL DRIP TRAY SMRG/P	HD8918/31
			UP TO S/N TW901722000000	
55		421944061701	SS CYL.PIN D=3.4 L=15.3	
			FROM S/N:TW901543554970 UP TO TW901647752088	
			ALWAYS USED FOR 120V HD8917/47-48	

POS	CODE	12NC	DESCRIPTION	NOTE
56		421941309471	KIT CONTAINERS LIDS (B)	
			UP TO S/N:TW901543554969	
			HD8917/01-09 HD8918/09	
56		421941309461	KIT SPARES CONTAINERS LIDS (A)	
			UP TO S/N:TW901543554969	
			HD8916/01-09 HD8918/21	
57		421944006871	GRY WATER LEVEL SENSOR COVER SMR	230V
			UP TO TW901647752088	
			ALWAYS USED FOR 120V HD8917/47-48	
58		421944063091	WHT ADH.AERSTOP UPP.CAS.COV.SMRG	
59	17800442	996530073661	2P.CONN.SENS.REED DUMP BOX CST UL ASSY	HD8917/47-48
60		421944009411	BLK REED SUPPORT SMR	HD8917/47-48
61	12000895	996530007951	SCREW TSP TORX 10 3X10 PLAST.SS	HD8917/47-48
62		421944067621	BLK SEAL CONT.LIDS SMRG	230V
			UP TO TW901647752088	
			ALWAYS USED FOR 120V HD8917/47-48	
63		421944063131	BLK DUMP BOX INSERT V2 NPR	
			FROM TW901633454059	
64		421944067551	BLK DUMP BOX V2 SMRG	
			FROM TW901633454059	
65		421944063681	M/BLK CASING V3 SMRG ASSY	
66		421944069061	M/BLK WATER CONTAINER LID V3 SMRG/P	230V
			FROM TW901647752089	
			HD8916/01-09-19 HD8918/21-31-41	
		421944069191	SS WATER CONTAINER LID V3 SMRG ASSY	230V
			FROM TW901647752089	
			HD8917/01-03-09 HD8918/09	
67		421944069051	DEEP/BLK BEAN COF.CONT.LID V3 SMRG/P	230V
			FROM TW901647752089	
			HD8916/01-09-19 HD8918/21-31-41	
		421944069181	SS COFFEE BEANS CONTAIN.LID V3 SMRG ASSY	230V
			FROM TW901647752089	
			HD8917/01-03-09 HD8918/09	
68		421944068961	BLK REAR LID FIXING INSERT V3 SMRG	230V
			FROM TW901647752089	
69		421944075131	BLK GRIND.ADJUST.KNOB 5 POS. SMR	230V
			FROM TW901647752089	

Щоб переглянути та придбати необхідну запчастину, натисніть на її номер на малюнку, або на її номер, назву у таблиці з позначкою

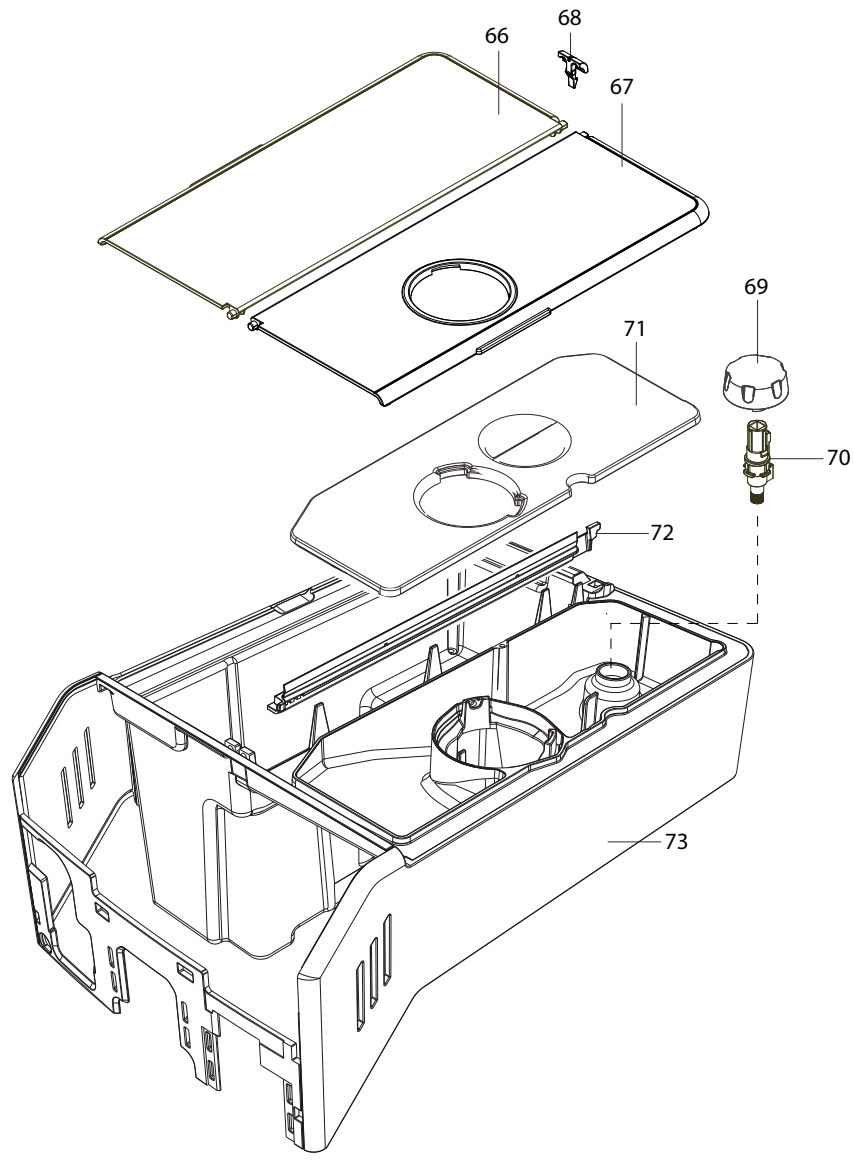

Saeco INTERNATIONAL GROUP

HD8916/01-09-19
HD8917/01-03-09-47-48
HD8918/09-21-31-41
HD8919/51-55-59

Cod.882891601010 - 609300 - 619870
Cod.882891701010 - 701620 -703530 - 709300 - 747520 - 748520
Cod.882891809870 - 821010 - 831220 - 841220 - 841300
Cod.882891951010 - 955220 - 959300-959870

POS	CODE	12NC	DESCRIPTION	NOTE
70		421944052341	BLW BEAN COFFEE GRINDER INSERT V2 SMR	230V
			FROM TW901647752089	
71		421944070662	TR.INN.BEAN COF.C.LID W/SEAL S/SC.V2 SMR	230V
			FROM TW901647752089	
72		421944072821	BLK SEAL CONT.LIDS V2 SMRG	230V
			FROM TW901647752089	
73		421944068901	BLK UPP.CASING COV.V2 SMRG	230V
			FROM TW901647752089	

POS	CODE	12NC	DESCRIPTION	NOTE

Щоб переглянути та придбати необхідну запчастину, натисніть на її номер на малюнку, або на її номер, назву у таблиці з позначкою

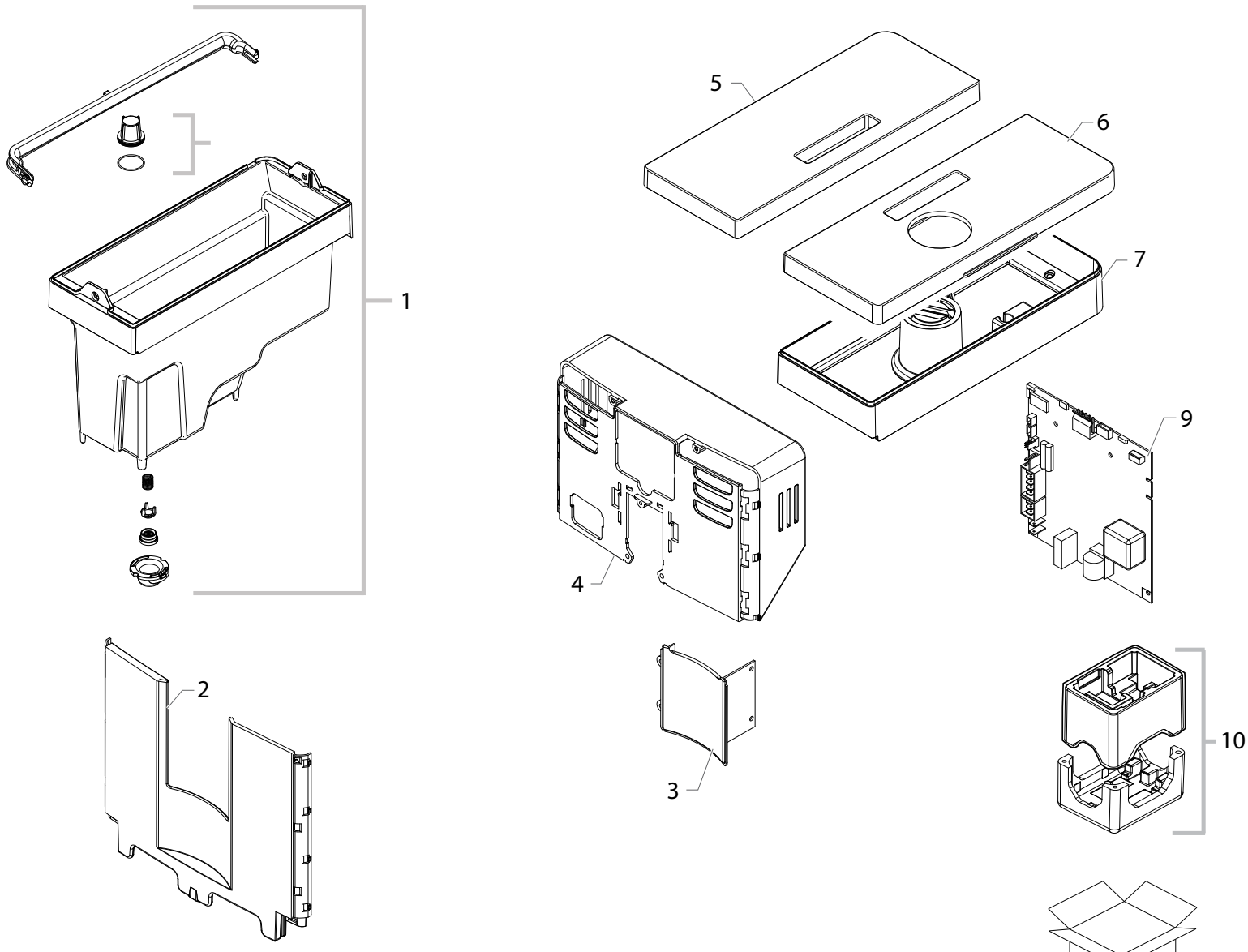

NOTE: THESE COMPONENTS ARE FOR EXT.VERSION ONLY- HD8919/51-55-59

Saeco INTERNATIONAL GROUP

HD8916/01-09-19
HD8917/01-03-09-47-48
HD8918/09-21-31-41
HD8919/51-55-59

CE

Cod.882891601010 - 609300 - 619870
Cod.882891701010 - 701620 -703530 - 709300 - 747520 - 748520
Cod.882891809870 - 821010 - 831220 - 841220 - 841300
Cod.882891951010 - 955220 - 959300-959870

POS	CODE	12NC	DESCRIPTION	NOTE
01		421944050151	TRANSP/GRY WATER CONTAINER SMRG/TE ASSY.	HD8919/51-55-59
02		421944051331	G/ANM DRIP TRAY INSERT SMRG/TE	HD8919/51-55-59
03		421944051361	G/ANM CASING INSERT SMRG/TE	HD8919/51-55-59
04		421944050021	G/ANM UPP.CASING COV.INS.S/SCR.SMRG/TE	HD8919/51-55-59
05		421944042421	G/ANM WATER CONTAINER LID SMRG/TE	HD8919/51-55-59
06		421944042951	G/ANM BEAN COF.CONT.LID SMRG/TE	HD8919/51-55-59
07		421944050751	TRANSP/GRY BEAN COF.CONTAINER SMRG/TE	HD8919/51-55-59
08		421946025861	DISPL.BOX SMRG/TE SAE INCANTO	HD8919/51-55-59
09		421941309021	CPR SMRG/TE REV02 ASSY	HD8919/51-55-59
10		421941308951	KIT PS-E INSERT FOR BOX SMRG/TE	HD8919/51-55-59

POS	CODE	12NC	DESCRIPTION	NOTE

Щоб переглянути та придбати необхідну запчастину, натисніть на її номер на малюнку, або на її номер, назву у таблиці з позначкою

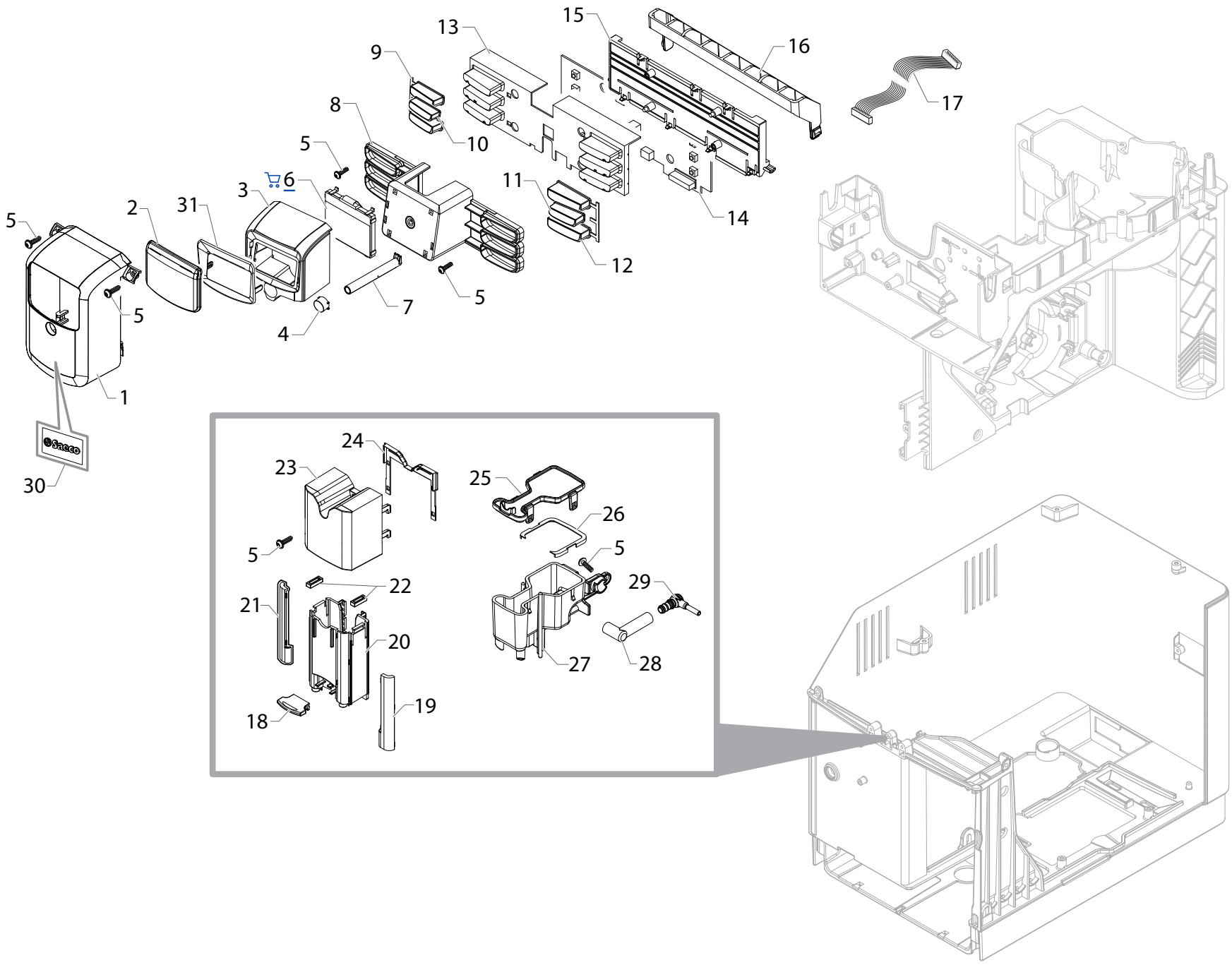

Saeco INTERNATIONAL GROUP

HD8916/01-09-19
HD8917/01-03-09-47-48
HD8918/09-21-31-41
HD8919/51-55-59

Cod.882891601010 - 609300 - 619870
Cod.882891701010 - 701620 -703530 - 709300 - 747520 - 748520
Cod.882891809870 - 821010 - 831220 - 841220 - 841300
Cod.882891951010 - 955220 - 959300-959870

POS	CODE	12NC	DESCRIPTION	NOTE
01		421944043701	CHROM.DISPLAY COVER SMRG	
02		421944036591	TRANSP.GLASS FOR DISPLAY SMRG	
03		421944032671	BLK FRONT PANEL MEMBRANE SMRG/H-P-T	
04		421944043621	TRANSP.STAND-BY BUTTON S/SCR.SMRG	
05	12000450	996530007819	SCREW TCBR TORX 10 3,5X12 PLAST.ZN-N	
06		421941307111	DISPLAY LCD 128X64 SMRG	
07		421944036581	BLK STAND-BY BUTTON LIGHT GUIDE SMRG	
08		421944036541	BLK DISPLAY SUPPORT SMRG	
09		421944043761	CHR.LEFT BUTT.S/SCR SMRG	REV.02
10		421944050182	CHROM.INTERMED.RIGHT LEFT.S/SCR V2 SMRG	REV.03
11		421944051271	CHROM.INTERMED.RIGHT BUTT.S/SCR SMRG/T	REV.02
12		421944051281	CHR.RIGHT BUTT.S/SCR SMRG/T	REV.02
13		421944052721	BLK SILIC.KEY V2 SMRG	
14		421941308731	KIT SPARES KYB - DISPLAY SMRG/P/H/T	230V
		421941311561	KIT SPARES KYB - DISPLAY SMRG/P/H/T	120V
15		421944036531	BLK DISPLAY KEYB.-INTERFACE SUPPORT SMRG	
16		421944034431	BLOCK KEY SUPP. SMRG	
17		421946020421	16P.CPU-USER INTERF.FLATCABLE SMRG	
18		421944043831	CHR.COFFEE SPOUT HANDLE SMRG	
19		421944043821	CHR.RIGHT FRAME COF.DISP.MOB.PART SMRG	
20		421944056791	M/BLK COF.DISPEN.MOBILE PART V2 SMRG AS.	
21		421944043811	CHR.LEFT FRAME COF.DISP.MOB.PART SMRG	
22		421944057331	BLK MOBILE SPOUT INSERT V2 SMGR	
23		421944056581	BLK COFFEE DISPENSER LID V2 SMRG	
24		421944046151	SEAL FOR MOBILE SPOUT SUPP.SMGR	
25		421944034321	BLK COFFEE DISPENSER BODY LID SMRG	
26		421944017651	WHT COFFEE DISPENSER BODY SEAL SMR	
27		421944034141	BLK COFFEE DISPENSER BODY SMRG	
28	17000955	996530073471	TRANS.BREW UNIT COF.OUTLET CONN.TUBE SMR	
29	17001849	996530073464	BLK BREW UNIT COFFEE OUTLET CONNECT.SMR	
30		421944049211	WRITTEN BRAND SAECO SMRG MET.STICKER	
31		421944036611	BLK DISPLAY FRAME SMRG	

POS	CODE	12NC	DESCRIPTION	NOTE

Щоб переглянути та придбати необхідну запчастину, натисніть на її номер на малюнку, або на її номер, назву у таблиці з позначкою

Exp.E74213 Rev.15 - 09/07/18

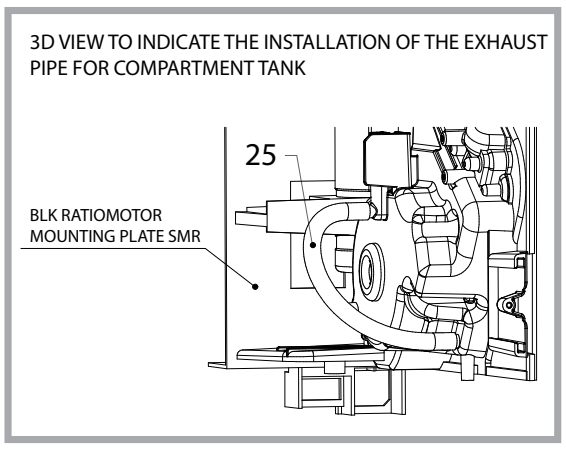

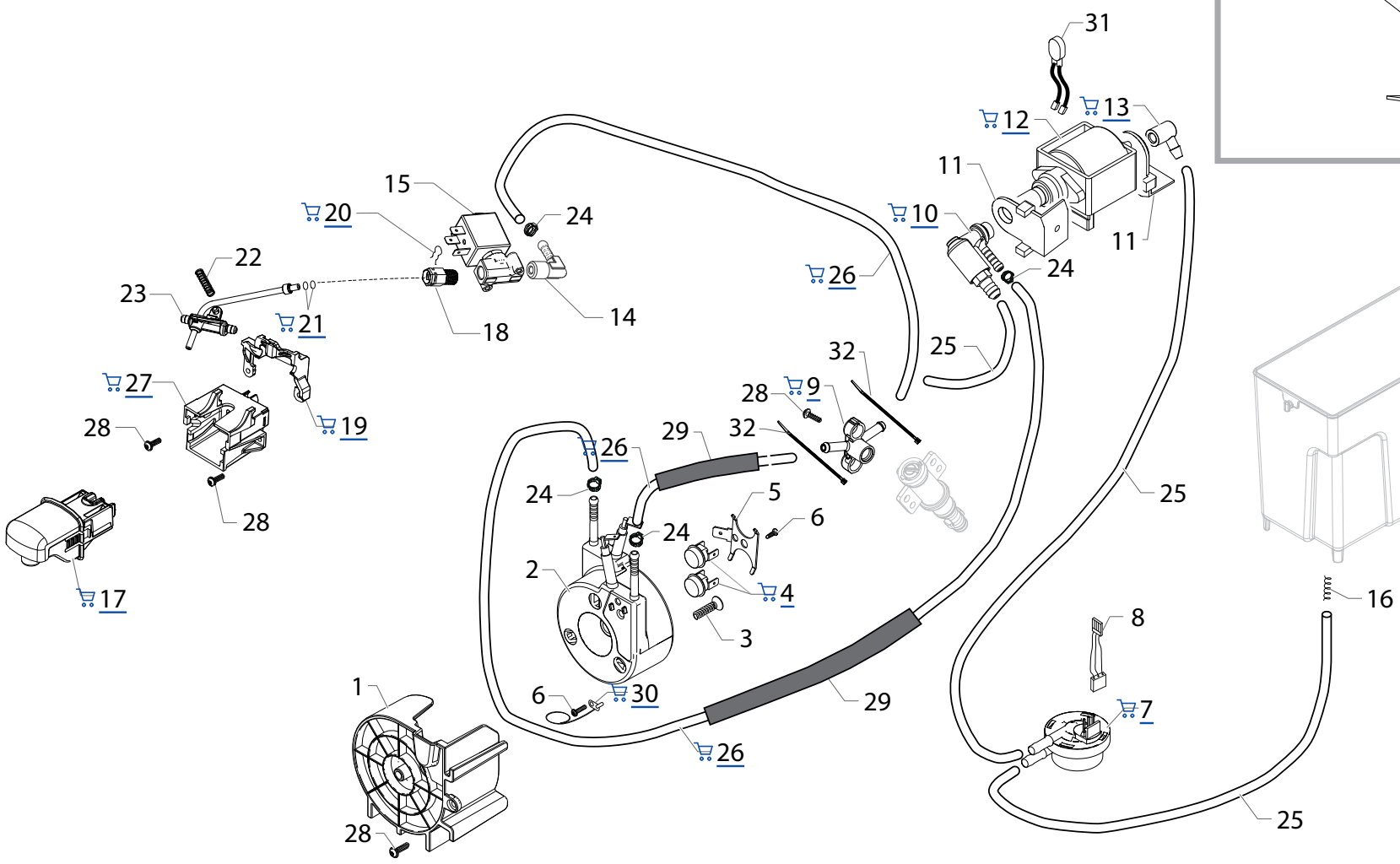

HD8916/01-09-19
HD8917/01-03-09-47-48
HD8918/09-21-31-41
HD8919/51-55-59

Cod.882891601010 - 609300 - 619870
Cod.882891701010 - 701620 -703530 - 709300 - 747520 - 748520
Cod.882891809870 - 821010 - 831220 - 841220 - 841300
Cod.882891951010 - 955220 - 959300-959870

POS	CODE	12NC	DESCRIPTION	NOTE
01		421944040831	BLK SLIM TUB.BOILER SUPPORT V2 SMR	
02		421944028841	TUB.BOILER XS4 ASSY.	230V-1900W
		421944046121	TUB.BOILER XS4 ASSY.	120V-1300W
03	12001280	996530008024	SCREW TSP TORX 10 5X20 PLAST.ZN-B	
04	12001033	996530007973	THERMOSTAT ONE SHOT 190°	
05	11001751	996530000997	TUB.BOILER V3 UPPER THERM.FIXING SPRING	
06	12001715	996530069758	SCREW TCB TORX 20 M4X8 AUTOFORMING ZN-B	
07	NV99.099	996530059843	TURBINE D=1,2 932-8521/00 ASSY.	
08	17800686	996530073488	3POLES CONNECTOR FLOWMETER SMR UL	
09		421944069751	BLK CONNECTOR FOR PIN BOILER V3 SMR	
10	11024863	996530068178	L-F/BR.SAFETY VALVE 16-18 BAR ASSY.	
11	149205850	996530018056	BLACK TYPE ULKA PUMP W/BEVEL SUPPORT	
12	12000140	996530007753	ULKA PUMP EP5/S GW	230V-50HZ
	12000142	996530007754	ULKA PUMP EAP5/S	120V-60HZ
13	11002149	996530001186	BLACK PUMP OUTLET 90°CONNECTOR P0049/A	
14	11024469	996530067632	L-F/BRASS CONNECTOR FOR BOILER AURA	
15		421944029331	2WAY EV OT57 G1/8F. X G1/8F.24V DC 10W-B	
16	0701.081	996530073439	SPRING FOR TUBE PRODUCT 1	
17		421944042971	BLK HOT WATER DISPENSER SMRG ASSY.	
18	11027572	996530072695	L-F/BRASS CONNECTOR 1/8” FOR TUBE D=4	
19		421944008851	BLK CARAFE GRAFT BODY INSERT SMR/T	
20	9011.144	996530048885	SS FORK FOR TUBE D=4	
21	140328059	996530013564	OR 2015 SILICONE PTFE/FDA	
22	17000006	996530009559	TWO WAY TEFLON TUBES SUPPORT SPRING MYB9	
23		421944029721	WHT PREFORM.TEFLON TUBE SUP.145 SMR/T AS	
24	12000096	996530007742	OETIKER CLAMP D=9,5 15400022	
25	JS01.022	996530057357	SILICONE TUBE 5X10 60SH	IN ROLL
26	16000380	996530009505	5X8,9 SILICONE TUBE	IN ROLL
27		421944008431	BLK CARAFE INSERT BODY SMR/T	
28	12000450	996530007819	SCREW TCBR TORX 10 3,5X12 PLAST.ZN-N	
29	16000540	996530009523	TRANSPAR.11X12,8 SILICONE TUBE	IN ROLL
30	17800628	996530073428	TEMPERATURE SENSOR NTC UL L=550MM	
31	17800635	996530074282	2P.CONN.PUMP SMR UL ASSY.	
32		242201520471	CABLE TIE PA66 BK 3.5X140 5309 B	
		421944046301	GEN.TUB.BOILER XS4 1900W 230V ASSY.	COMPLETE
		421944055941	GEN.TUB.BOILER XS4 GAG 1300W 120V ASSY	COMPLETE

POS	CODE	12NC	DESCRIPTION	NOTE

INCANTO OTC - EXT

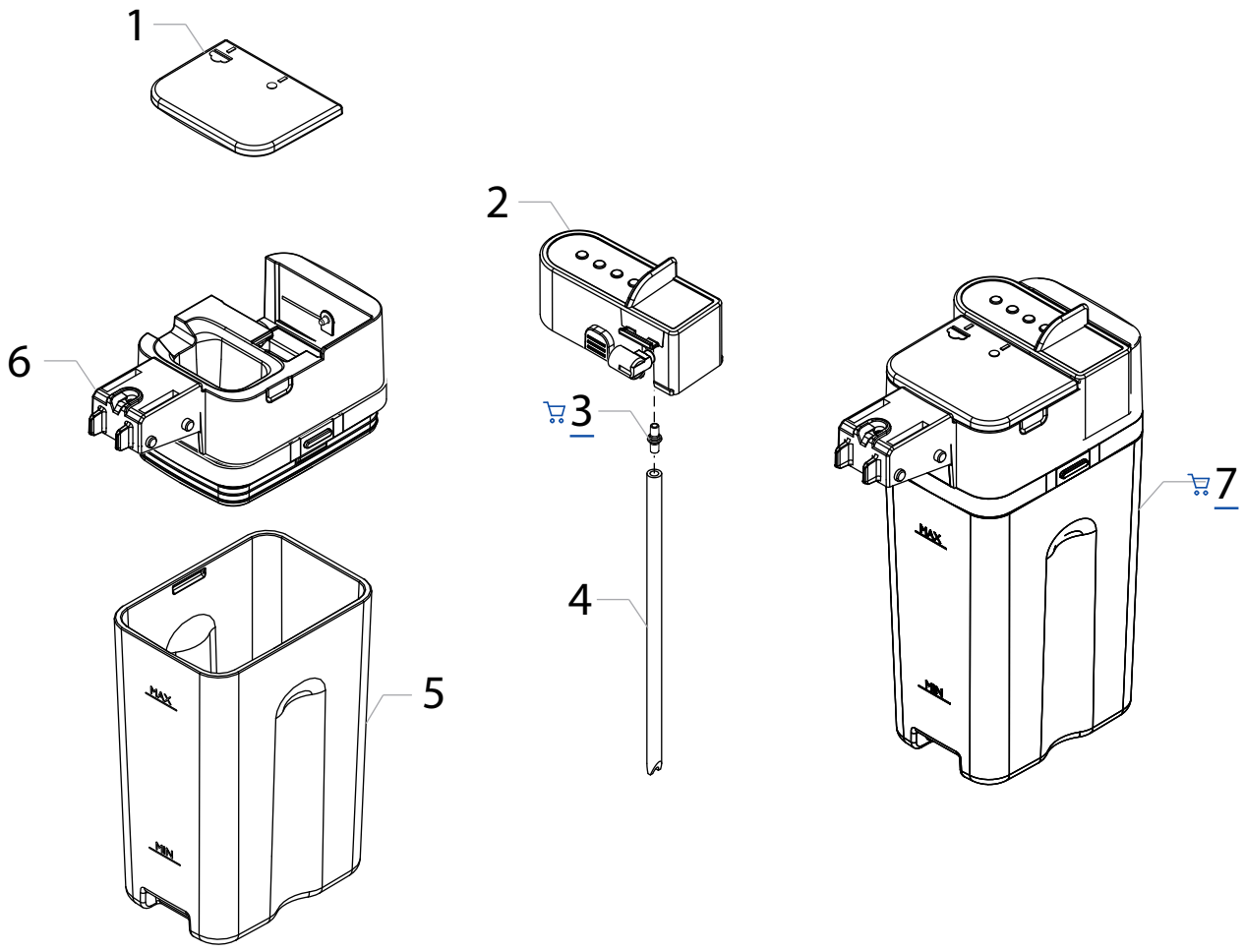

Saeco INTERNATIONAL GROUP

HD8916/01-09-19
HD8917/01-03-09-47-48
HD8918/09-21-31-41
HD8919/51-55-59

CE

Cod.882891601010 - 609300 - 619870
Cod.882891701010 - 701620 -703530 - 709300 - 747520 - 748520
Cod.882891809870 - 821010 - 831220 - 841220 - 841300
Cod.882891951010 - 955220 - 959300-959870

POS	CODE	12NC	DESCRIPTION	NOTE
01		421944007561	BLK CARAFE COVER PLUG SMR/T	
02		421941307191	KIT SPAR.BLK CAP.COV.SERVO CAR.SMRT/T AS	
03	17001362	996530068626	BLK MILK INTAKE TUBE CONNECT.INS.V2 RYL	
04	11012814	996530067584	SILICONE TUBE 3,5X6 L=140 MM	
05		421944067741	TRANSP.CARAFE HGO/T SAN LURAN	
06		421941307041	KIT SPARES BLK UPP.COV.SERVO CAR.SMRT/T	
07		421944029451	TRANSP/BLK GEN.CARAFE SLID.SMR/T ASSY.	

POS	CODE	12NC	DESCRIPTION	NOTE

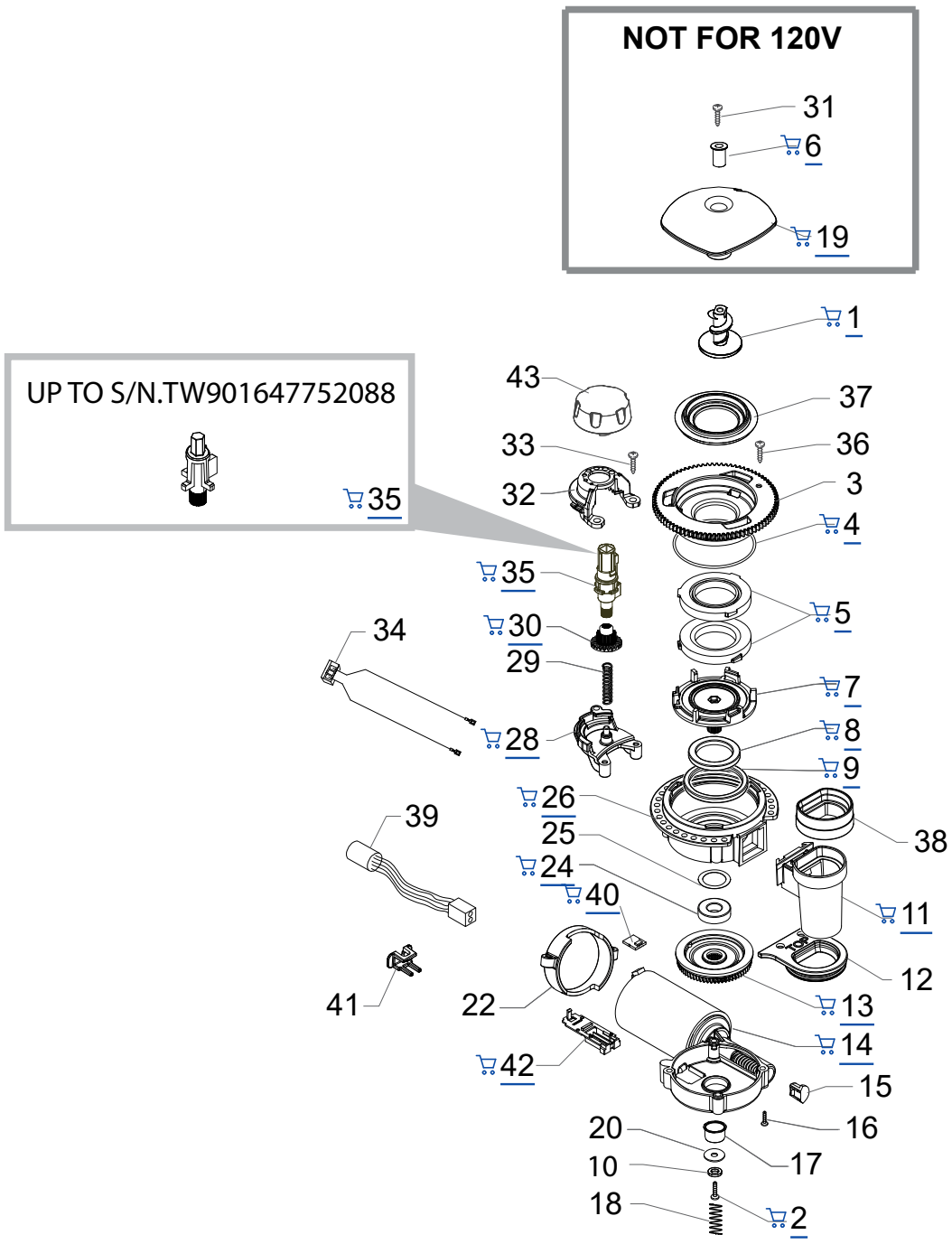

Saeco INTERNATIONAL GROUP

HD8916/01-09-19
HD8917/01-03-09-47-48
HD8918/09-21-31-41
HD8919/51-55-59

Cod.882891601010 - 609300 - 619870
Cod.882891701010 - 701620 -703530 - 709300 - 747520 - 748520
Cod.882891809870 - 821010 - 831220 - 841220 - 841300
Cod.882891951010 - 955220 - 959300-959870

POS	CODE	12NC	DESCRIPTION	NOTE
01	11010031	996530005586	TEA/ZAMA INCREASE SCREW GRINDER	
02	129574802	996530012928	SCREW TCB TORX 20 M4X30 ZN-B	
03		421944053581	BLK COF.GRINDER UPPER GRINDER SUPPORT V3	
04	140328960	996530013577	OR ORM 0530-15 NBR FDA	
05	146520100	996530016342	BAKED CLAY GRINDER 48X28	
06	11012466	996530006412	BRASS BUSH BEAN CONT.FINGER PROTEC.P0057	
07	149198350	996530017952	BLK LOWER COFFEEGRINDER GRINDER SUPPORT	
08	123030300	996530011183	AXIAL BEARING EKKO 342.35252	
09	140360500	996530013597	FELT RING 45,4X39,4X4	
10	128310402	996530012341	GALV.WASHER UNI 8842 A4	
11	11026355	996530068049	BLK GROUND COFF.OUTLET CONVEYOR V4 ASSY.	
12		421944060561	GRY GROUND COF.CONT.LOWER SEAL V2 SMART1	
13	226000300	996530029609	GEAR SX Z=38 FOR GRINDER MOTION ASSY.	
14		421944049151	MOTOR COFFEEGRINDER V3.2 ASSY.	230V
		421941305001	MOTOR COFFEEGRINDER V3.1 ASSY.	120V
15	149214800	996530018139	MC V3 MOD=1,25 WORM SCREW CENTRING CAP	
16	129661702	996530012992	SCREW TCB TORX 3,5X30 PLAST.ZN-B	
17	11002873	996530001389	INSULATOR BUSH FOR GRINDER MOTOR P124	
18	11000597	996530000376	STEEL COF.GRINDER SUPPORT SPRING P124	
19	17001008	996530073467	TRANS.BEAN CONTAIN.FINGER PROTECT.SMR UL	
20	128381902	996530012375	STEEL FLAT WASHER DI=4,3 DE=14 SP=1,5	
22	11000194	996530000115	BLACK COFFEEGRINDER MOTOR SUPPORT P124	
24	123030200	996530011182	RADIAL BEARING 61900.2RS1	
25	128381800	996530012374	STEEL CRINKLE WASHER 21,8X14X0,25	
26	142905450	996530015258	BLK UPPER BODY WITH COFFEE GROUND OUTLET	
28	11002613	996530001314	LOWER COFFEEGRINDER GEAR SUPPORT P124	
29	11002572	996530001308	COFFEEGRINDER REGULATION SPRING P124	
30	11003784	996530001907	COFFEE GRINDING ADJUSTMENT GEAR P0049	
31	U043.004	996530061808	ZN-B TCB TORX 20 M4X16 ZN-B	
32	11002508	996530001296	UPPER COFFEEGRINDER GEAR SUPPORT P124	
33	129914002	996530013165	SCREW TCB TORX 10 3,5X16 PLAST.ZN-B	
34	17800688	996530073454	2POLES CONNET.COFFEEGRINDER MOTOR SMR UL	
		421946000941	2P.CONN.COF.GRIND.MOTOR FUSE1.0A SMRO UL	HD 8919/55
35		421944025161	YLW BEAN COFFEE GRINDER INSERT SMR	230V
			UP TO TW901647752088	
			ALWAYS USED FOR 120V	
		421944052341	BLW BEAN COFFEE GRINDER INSERT V2 SMR	230V
			FROM TW901647752089	

POS	CODE	12NC	DESCRIPTION	NOTE
36	12001622	996530068586	SCREW TCB TORX B 3,5X9,5 SCHEET NIK	
37		421941085872	COFFEE GRINDER SEAL P119 GRY 7035	
38	145854360	996530015958	BLK GROUND COFFEE CONT.UPPER SEAL SMART1	
39	17800687	996530073453	3P.CONN.MC SENSOR SMR UL ASSY.	HD8917/47-48
40	181540900	996530022784	ELECTR.BOARD WITH SENSOR HAL506 SF-K	HD8917/47-48
41	17001921	996530072477	BLK WIRING FIX INSERT FOR GRINDER BOARD	HD8917/47-48
42	149199050	996530017963	BLK SENSOR SUPPORT FOR COF.GRINDER MOTOR	HD8917/47-48
43		421944075131	BLK GRIND.ADJUST.KNOB S/SCR.5 POS.SMR	230V
			FROM TW901647752089	
		421944054631	GEN.MOTOR COF.GRINDER V2 SMR/B 230V ASSY	COMPLETE
		421944063111	GEN.MOTOR COF.GR.V2 W/FUSE MR/B 230V ASSY	COMPLETE
			HD8919/51-55-59	
		421944054601	GEN.MOT.COF.GRINDER V2 SMR/H-P-T 120V AS	COMPLETE
			HD8917/47-48	

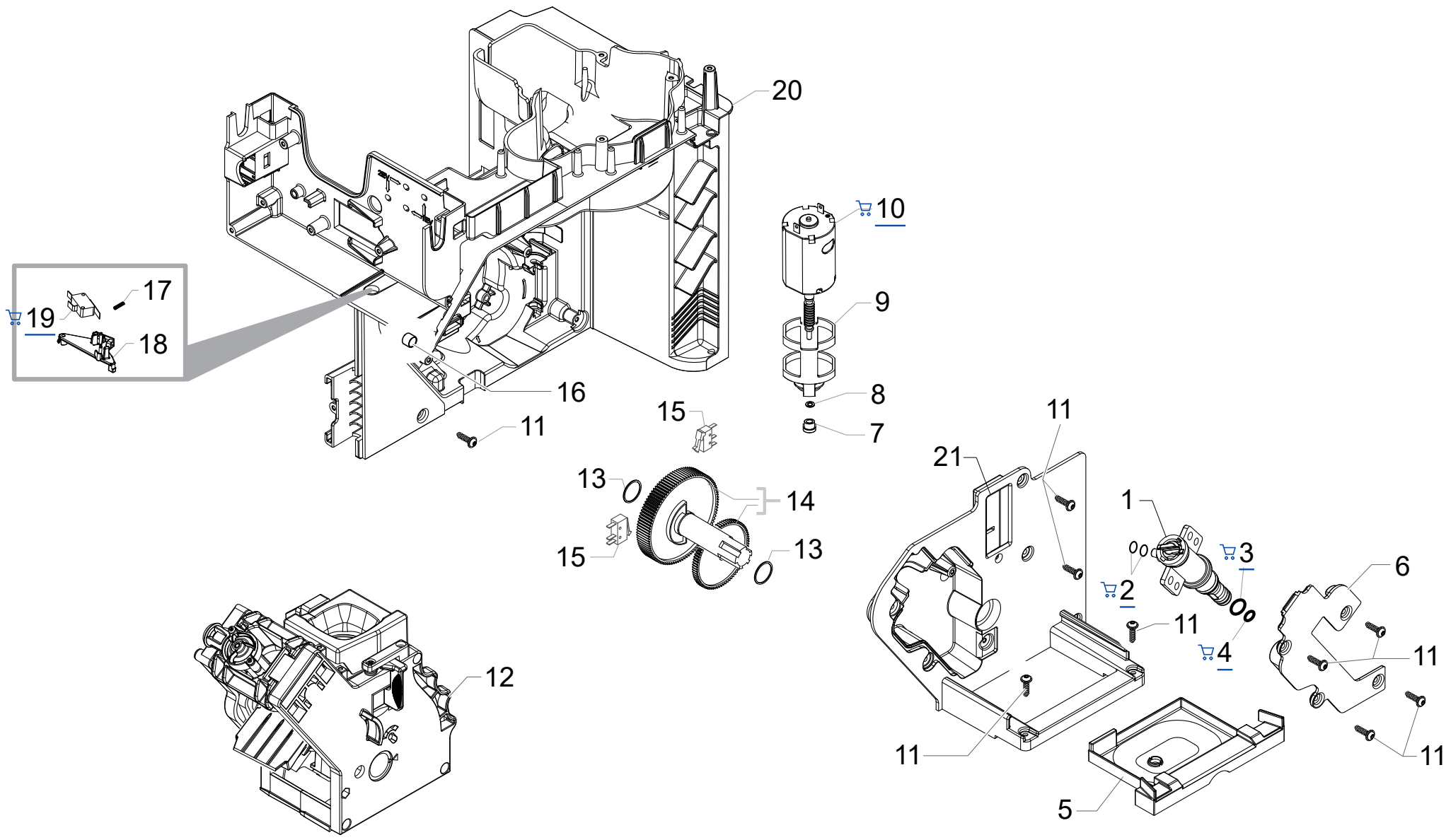

Saeco INTERNATIONAL GROUP

HD8916/01-09-19
HD8917/01-03-09-47-48
HD8918/09-21-31-41
HD8919/51-55-59

CE

Cod.882891601010 - 609300 - 619870
Cod.882891701010 - 701620 -703530 - 709300 - 747520 - 748520
Cod.882891809870 - 821010 - 831220 - 841220 - 841300
Cod.882891951010 - 955220 - 959300-959870

POS	CODE	12NC	DESCRIPTION	NOTE
01		421946011491	BLK PIN FOR BOILER VALVE 4BAR ASSY.	
02	140328059	996530013564	OR 2015 SILICONE PTFE/FDA	
03	NM01.035	996530059399	OR ORM 0090-20 SILICONE	
04	NM01.057	996530059419	OR ORM 0050-20 IN SILICONE	
05		421944062701	BLK BREW UNIT DRAWER COFFEE V2 SMR	
06	17000730	996530074054	BLACK BOILER SEAT PIN COVER SMR	
07	9121.046	996530049898	BRONZE SINTERED BUSH FOR MOTOR RATIOMOT.	
08	148380200	996530017424	BAKELIZZATE WASHER D=5,5	
09	9121.044	996530049896	ANTIVIBRATION FOR MOTOR	
10	11005214	996530002796	MOTOR FOR RATIOMOTOR P124 ASSY.	
11	12001728	996530070321	SCREW TCBR TORX 10 3,5X12 PLAST.SS	
12		421944092331	BLK/YLW BREW UNIT 8GR.5BAR FTR/B V3	
13	9161.132	996530050569	MYLAR WASHER FOR RATIOMOTOR	
14	20000900	996530009913	SPARES KIT GEARS FOR RATIOMOTOR V2	
15	12001841	996530073474	MICROSWITCH XC/SM1	
16	9161.111	996530050555	MAGNET FOR FLOAT SUPERAUT.	
17		421944006861	STEEL SPRING FOR MICRO COMPENSATOR SMR	
18	17001508	996530073469	BLACK MICRO COMPENSATOR SMR	
19	12001890	996530073209	MICROSWITCH XG/V3D	
20		421944043602	BLK RATIOMOTOR MOUNTING PLATE V2 SMRG ASSY	
21		421941287512	BLK RATIOMOT.MOUNTING PLATE COVER V2 SMR	

POS	CODE	12NC	DESCRIPTION	NOTE

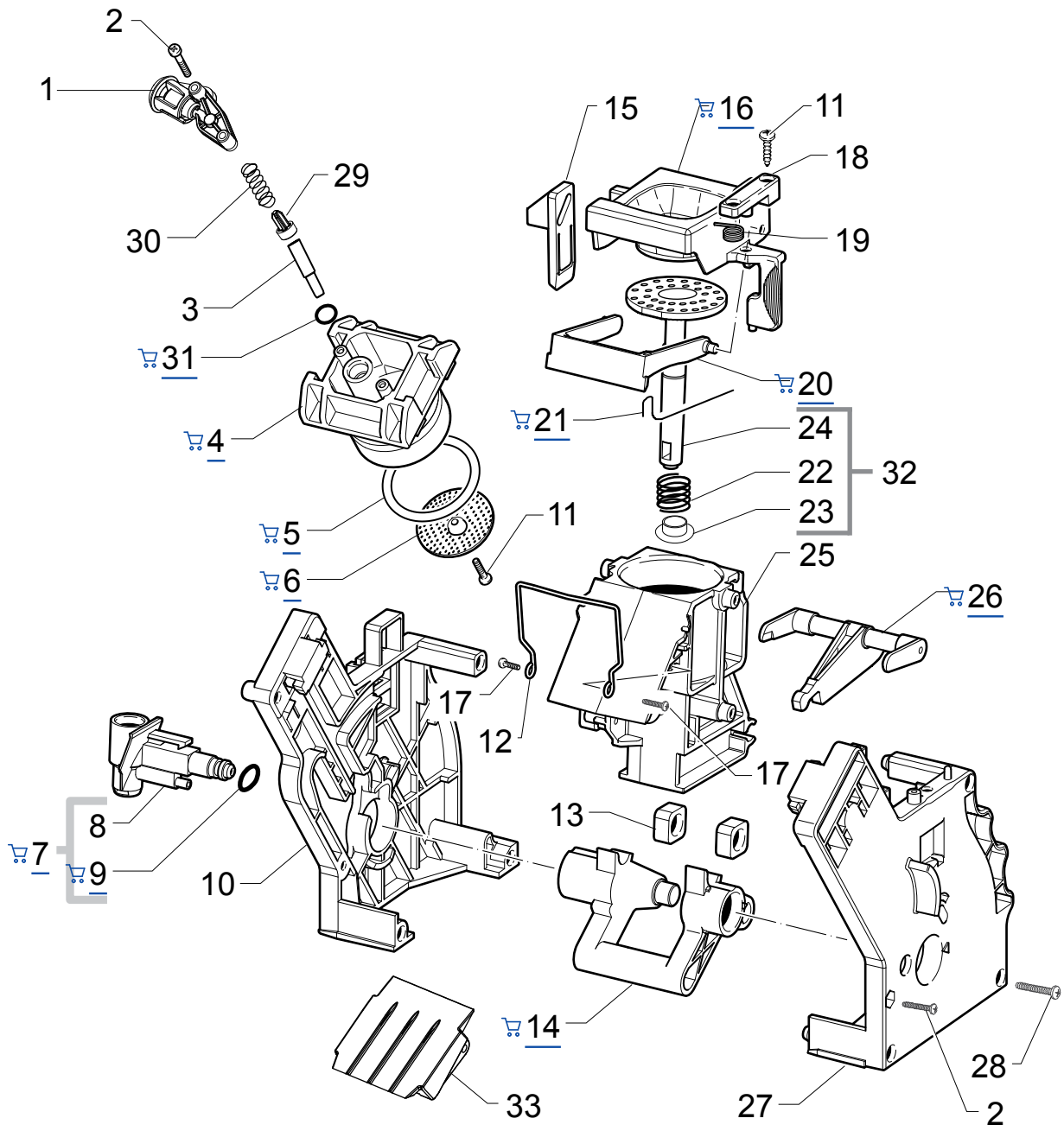

Saeco INTERNATIONAL GROUP

HD8916/01-09-19
HD8917/01-03-09-47-48
HD8918/09-21-31-41
HD8919/51-55-59

CE

Cod.882891601010 - 609300 - 619870
Cod.882891701010 - 701620 -703530 - 709300 - 747520 - 748520
Cod.882891809870 - 821010 - 831220 - 841220 - 841300
Cod.882891951010 - 955220 - 959300-959870

POS	CODE	12NC	DESCRIPTION	NOTE
01		421944065221	BLK BREW UNIT COF.OUTLET SLEEVE SMR ASSY	REV.02
02	12000550	996530007838	SCREW TCB TORX 10 3X25 PLAST.SS	
03	11009276	996530005372	BLK COUNTER PISTON TUBE BREW UNIT S0053	
🛒 04	11001840	996530001046	BLACK COUNTER PISTON BREW UNIT 8GR.P124	
🛒 05	NM01.044	996530059406	OR ORM 0320-40 SILICONE PTFE/FDA	
🛒 06	9161.268	996530050709	PERCOLATOR DE=35,8 ELFO	
🛒 07	20000440	996530009825	BLACK WATER INLET SLEEVE BREW UNIT ASSY.	
08	9161.064.050	996530050488	BLACK WATER INLET SLEEVE BREW UNIT ROYAL	
🛒 09	NM02.007	996530059441	OR 2025 IN TERMOIL	
10	9161.375.050	996530050832	BLACK BREW UNIT REAR PLATE SMART	
11	12000895	996530007951	SCREW TSP TORX 10 3X10 PLAST.SS	
12	11001556	996530000898	SS BREW UNIT SPRING H=49 SMART	
13	9161.094.050	996530050539	BLACK BREW UNIT DRILLED BLOCK	
🛒 14		421944051231	YLW BREW UNIT ELBOW SHAFT M5000	
15		421944046931	YLW BREW UNIT COUPLING PLATE V2 SMART	
🛒 16	149261350	996530018241	BLACK HOPPER DOSER BREW UNIT SMART1	
17	129912521	996530013148	SCREW TCBR TORX 10 3,5X14 PLAST.SS	
18		421944050711	YLW BREWUNIT HOPPER BLOCKING PLATE SMART	
19	9161.378	996530050838	SS HOPPER SPRING FOR BREW UNIT SMART	
🛒 20	11004161	996530002096	BLACK SCRAPER FOR BREW UNIT M5000	
🛒 21	9161.046	996530050455	SS SCRAPER SPRING FOR BREW UNIT	
22	9161.198	996530050627	SS.8GR.BREW UNIT PISTON SPRING	
23	9161.191	996530050618	WHITE 8GR.-12GR.BREW UNIT PISTON BUSH	
24		421944065791	GRY BREW UNIT INTEGR.PISTON 8GR.V3 ASSY	
25		421944014611	BLK COF.CONTAIN.BREW UNIT V2 M5000 ASSY.	
🛒 26	11003078	996530001452	BLACK CONNECTING ROD BREW UNIT 8GR.	
27	11005920	996530003228	BLACK BREW UNIT FRONT PLATE S/SCR.SMART	
28	12000897	996530007953	SCREW TCB TORX 10 3,5X20 PLAST.SS	
29		421944081491	BREW UNIT VALVE FTR/B	
30		421941064021	SS.CONICAL SPRING	
🛒 31	140328761	996530013575	OR ORM 0060-15 TERMOIL	
32		421944065811	GRY BREW UNIT 8GR.INT.PISTON GEN.V3 ASSY	
33	17000737	996530073426	BLACK BREW UNIT CONVEYOR SLIDE L=56,3	
		421944092331	BLK/YLW BREW UNIT 8GR.5BAR FTR/B V3	

POS	CODE	12NC	DESCRIPTION	NOTE