Щоб переглянути та придбати необхідну запчастину, натисніть на її номер на малюнку, або на її номер, назву у таблиці з позначкою

Exp. E74190 Rev.07 03/11/15

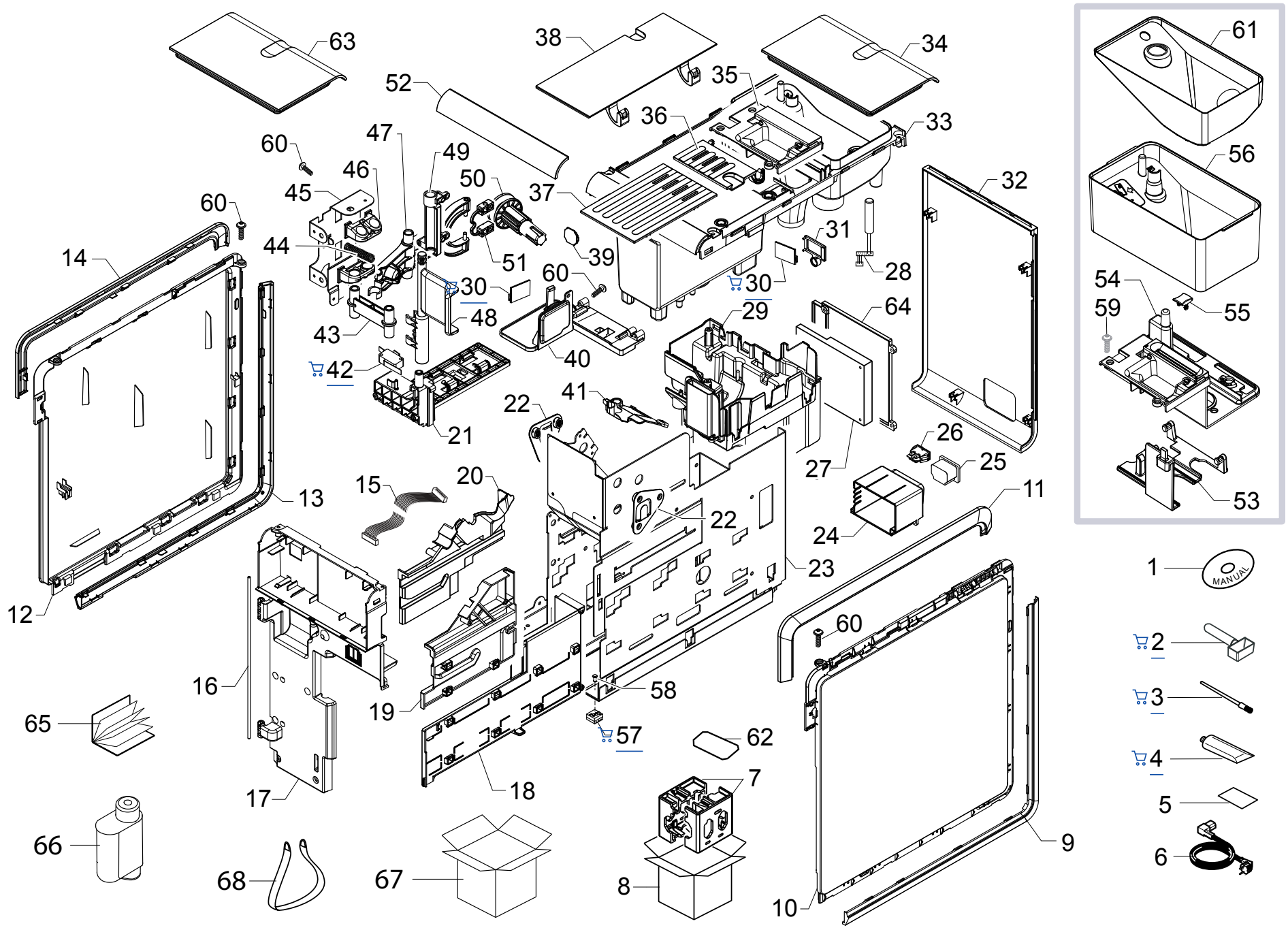

Saeco INTERNATIONAL GROUP

HD8964/01-05-08-47 HD8964/47
HD8965/01 HD8966/01-05-06
HD8966/08-11-13-16-47 HD8966/47

CE

Cod. 10004234-882896405710-6408150-6447540-882896447740
Cod. 882896501010-10004434-882896605710-6606470
Cod. 882896608150-6611010-6613530-6616660-6647540-882896647740

POS	CODE	12NC	DESCRIPTION	NOTE
01		421940437791	DOCUMENTAT.CD CST GRANBARISTO ASSY.	
02		421944033301	BLK ABS COFFEE MEASURE SMART	
03	127390100	996530011867	BRUSH FOR CLEANING	
04		421946017941	KLUBERLUB NH1 11-222 TUBE 5GR.	
05	0301.961	996530039604	STICKER FOR WATER HARDNESS TEST	
06		421946001591	BLK POWER CABLE SCHUKO L=800	
	183970350	996530025882	BLK POWER CABLE UK L=1200	
	183940650	996530025872	BLACK POWER CABLE AUSTRALIA L=1200	
	183921950	996530025843	BLK POWER CABLE SJT3 USA UL L=1200	
	11004247	996530002167	BLK POWER CABLE RVV 3X1 CHINA L=1200	
	11001985	996530001089	BLK POWER CABLE KOREA L=1200	
	11004246	996530002166	BLK POWER CABLE TAIWAN HVCTF L=1200	
07		421940813021	KIT PS-E INSERT FOR BOX CST	
08		421940312091	DISPL.BOX CST SAE COFFEE ST EU	
		421944025651	DISPL.BOX CST SAE GRANBARISTO USA	
09		421941301721	BLK RIGHT SIDE CASING LOWER FRAME CST	
		421941301801	CHROM.RIGHT SIDE CASING LOWER FRAME CST	
10		421944025101	BLK RIGHT SIDE CASING COVER V2 CST	
		421944026121	WHT RIGHT SIDE CASING COVER V2 CST	
11		421941301691	BLK RIGHT SIDE CASING UPPER FRAME CST	
		421941301771	CHROM.RIGHT SIDE CASING UPPER FRAME CST	
12		421944025121	BLK LEFT SIDE CASING COVER V2 CST	
		421944026131	WHT LEFT SIDE CASING COVER V2 CST	
13		421944026091	BLK LOWER LEFT FRAME CASING V2 CST	HD8964/01-05-08-47
		421944026101	CHROM.LOWER LEFT FRAME CASING V2 CST	
14		421941301701	BLK LEFT SIDE CASING UPPER FRAME CST	
		421941301781	CHROM.LEFT SIDE CASING UPPER FRAME CST	
15	17800579	996530073759	10POLES CPU-PWR FLAT CABLE CST	
16	17001864	996530073751	STEEL PIN FOR DOOR HINGE CST	
17	17001723	996530073718	BLACK DISPLAY SUPPORT CST	
			TO S/N TU901419067670	
		421944026431	BLK DOOR SUPPORT V2 CST	
			FROM S/N TU901419067671	
18	17000789	996530073715	BLACK BREW UNIT RIGHT SUPPORT PLATE CST	
19	17000790	996530073731	BLACK BREW UNIT RIGHT COUPLING PLATE CST	
20		421941280202	BLK BREW UNIT LEFT COUPLING PLATE V2 CST	
21	17001701	996530073743	BLACK FRONT COMPONENTS SUPPORT CST	

POS	CODE	12NC	DESCRIPTION	NOTE
22	17001762	996530073758	BLACK INSERT FOR PISTON UNIT CST	
23	11030036	996530073758	BLACK STEEL CASING CST ASSY.	
24	17001717	996530073756	BLACK SOCKET-SWITCH SUPPORT CST	
25	12001883	996530072437	CUP SOCKET V3 EN 60320 C 13	
26		242212625104	SWI POW 2P 12A 250V FASTON GP12H B	
		242212625106	SWI POW 2P 10A 250V FASTON 8500 B	USA
27	11027377	996530073843	PWR+SW CST/T ASSY.	230V
		421941306811	PWR+SW CST/T ASSY.	230V
			HD8965/01	
		421941306561	PWR+SW CST/T 120V ASSY.	120 V
28		421946000711	2POLES CONN.SENS.REED COF.CONTAIN.CST UL	
29	17001682	996530073738	BLACK HORIZONTAL MOUNTING PLATE CST	
		421941305521	BLK HORIZONTAL MOUNTING PLATE CST UL	USA
30		421941306721	CPU+SW WATER LEVEL SENSOR V3 ASSY.	
31	17001719	996530073734	BLK CAPACIT.SENSOR LOCKING INSERT CST	
32	17001699	996530073692	REAR CASING COVER CST	
		421941302031	WHT REAR CASING COVER CST	
33		421944000241	BLK COVER CASING CST/B	BASE / BLK
		421941286552	WHT COVER CASING V2 CST/HM	MID / SS WHITE
		421944012611	BLK COVER CASING CST/BM	BASE / SS BLK
		421944012582	BLK COVER CASING V2 CST/HM	MID / SS BLK
		421944032741	BLK COVER CASING S/SCR.CST/B	HD8964/47
34	17002069	996530073703	NAT/GRY BEAN COF.CONTAINER LID CST ASSY.	
35		421944000231	BLK CASING INSIDE COVER PLATE CST	
36	17001446	996530073769	BLACK GROUND CONTAINER DOOR CST	
36		421941302061	WHT GROUND CONTAINER DOOR CST	
37	17001779	996530073777	BLACK CUP WARMING LID CST/H	
		421941302041	WHT CUP WARMING LID CST	
38	17001447	996530073783	BLACK WATER CONTAINER DOOR CST/H	
		421941302081	WHT WATER CONTAINER DOOR CST	
39	17000363	996530009605	TRANSP.INFRAREDS PLATE MDS	
40	17001718	996530073744	BLACK REAR COMPONENTS SUPPORT CST	
41		421941287062	BLK HORIZ.MOUNTING PLATE PROTECT.V2 CST	
42	12001890	996530073209	MICROSWITCH XG/V3D	
43	17001692	996530073754	BLACK BREW UNIT TRANSMIS.GRAT JOINT CST	
44		421944007771	SS BREW UNIT TRANSMIS.LEVER SPRING CST	
45	17001490	996530073761	STEEL LEVER SUPPORT PLATE CST	

Exp. E74190 Rev.07 03/11/15

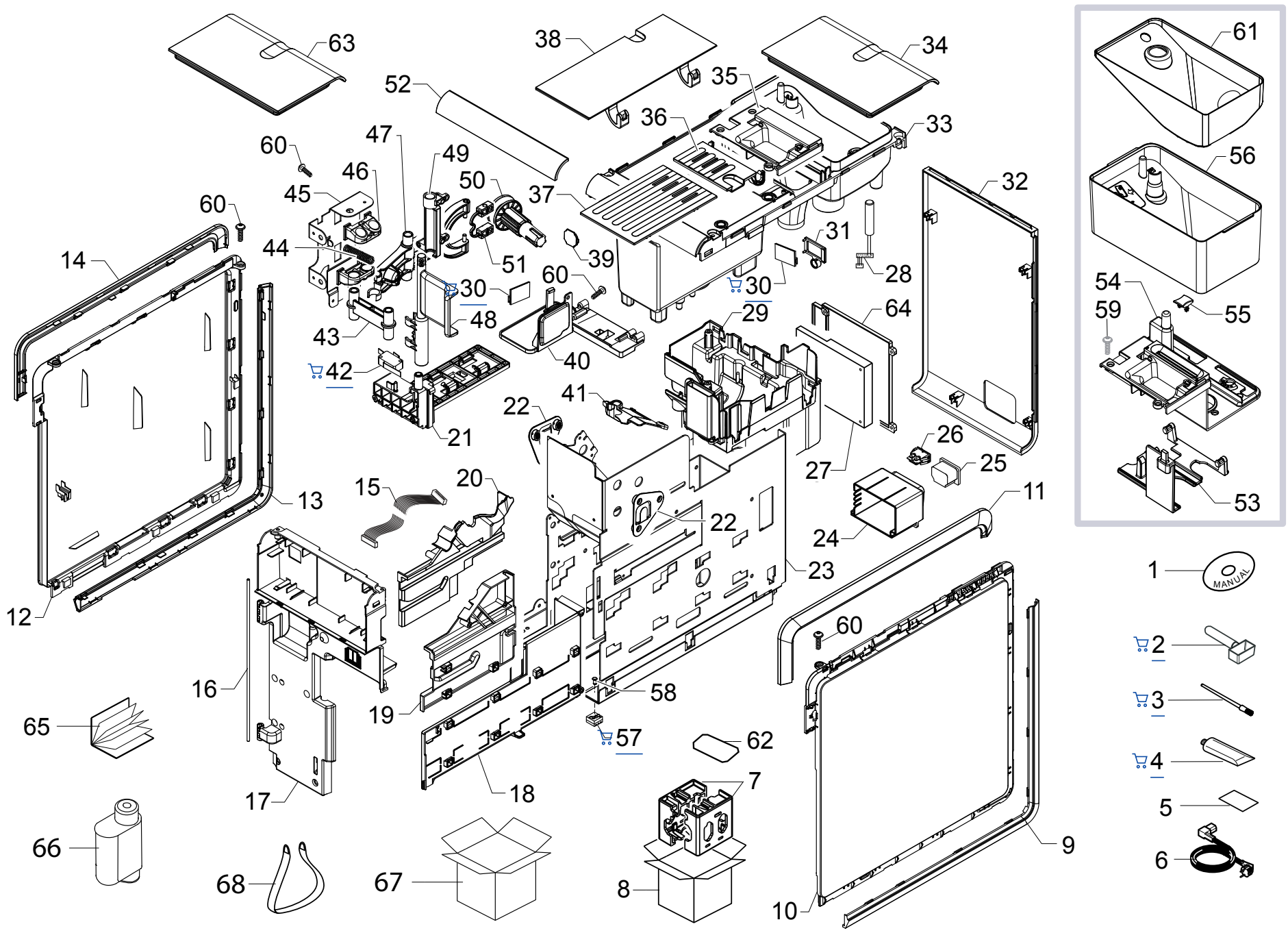

Saeco INTERNATIONAL GROUP

HD8964/01-05-08-47 HD8964/47
HD8965/01 HD8966/01-05-06
HD8966/08-11-13-16-47 HD8966/47

Cod. 10004234-882896405710-6408150-6447540-882896447740
Cod. 882896501010-10004434-882896605710-6606470
Cod. 882896608150-6611010-6613530-6616660-6647540-882896647740

POS	CODE	12NC	DESCRIPTION	NOTE
46	17001691	996530073721	BLK BREW UNIT TRANSMISS.LEVER SUPP.CST	
47	17001781	996530073786	BLK BREW UNIT TRANSMIS.LEVER CST ASSY.	
48	17001689	996530073779	BLACK BREW UNIT TRANSMIS.GRAT LEVER CST	
49	17001696	996530073772	BLK BREW UNIT TRANSM.GRAT LEVER SUPP.CST	
50	17000799	996530073762	BLACK RATIOMOTOR TRANSMISSION SHAFT CST	
51	17001690	996530073752	BLACK BREW UNIT TRANSMIS.SLIDER CST	
52		421944007661	SB/SS CASING COVER INSERT CST/HM	STEEL MODELS
53	17002065	996530073746	BLK BEAN COF.CONT.RELEASE PLATE CST	STEEL MODELS
54	17002091	996530073746	BLK BEAN COF.CONT.RELEASE FIX PLATE CST	STEEL MODELS
		421944012591	BLK COF.CONT.RELEASE FIX PLATE CST/HM	MID / SS ONLY
55		421941302011	WHT BEAN COF.CONT.RELEASE KNOB HGO	STEEL MODELS
	17002119	996530073534	M/BLK BEAN COF.CONT.RELEASE KNOB HGO	MID / SS ONLY
56		421941307131	KIT SPAR.BLK REM.COF.CONT.S/SC.CST/HM AS	MID / SS / STEEL MODELS
57	11021829	996530007156	BLACK/TRANSP.RIGID FOOT MYB9	
58	11021769	996530007136	BLACK RIGID FOOT FIXING PIN MYB9	
59	12001787	996530073717	SCREW TCBR TORX 10 3X8 PLAST.SS	
60	12000450	996530007819	SCREW TCBR TORX 10 3,5X12 PLAST.ZN-N	
61		421944029771	BLK ADDITION.BEAN CONT.V2+SEAL CST ASSY.	STEEL MODELS
		421944029761	BLK ADDITION.BEAN CONT.+SEAL CST ASSY.	HD8964/47
62		421944013991	PS-E UPPER INSERT FOR BOX CST	
63		421944013671	WHT COVER HOLE TOP COVER CASING CST	MID / SS WHITE
		421944008161	BLK COVER HOLE TOP COVER CASING CST	MID / SS BLK
64	17001721	996530073889	BLK PWR BOARD COVER CST	USA
65		421946003701	MANUAL SAE HD8964 CST/B GB	
		421946003721	MANUAL SAE HD8964 CST/B FR	
		421946004051	MANUAL SAE HD8964 CST/B ES	
		421946004311	MANUAL SAE HD8966 CST/H GB	
		421946004331	MANUAL SAE HD8966 CST/H FR	
		421946004341	MANUAL SAE HD8966 CST/H ES	
		421946004251	MANUAL SAE HD8964 CST/B CHN	
		421946004531	MANUAL SAE HD8966 CST/H CHN	
66	21002051	996530071783	ACC PSA MAVEA WATER FILTER 1UNIT	
67		421940312081	WHT EXTERN.BOX CST SAE GRANBARISTO 23L.	
68	13001097	996530008404	BAND FOR LIFTING L=1800MM H=300MM	

POS	CODE	12NC	DESCRIPTION	NOTE

Щоб переглянути та придбати необхідну запчастину, натисніть на її номер на малюнку, або на її номер, назву у таблиці з позначкою

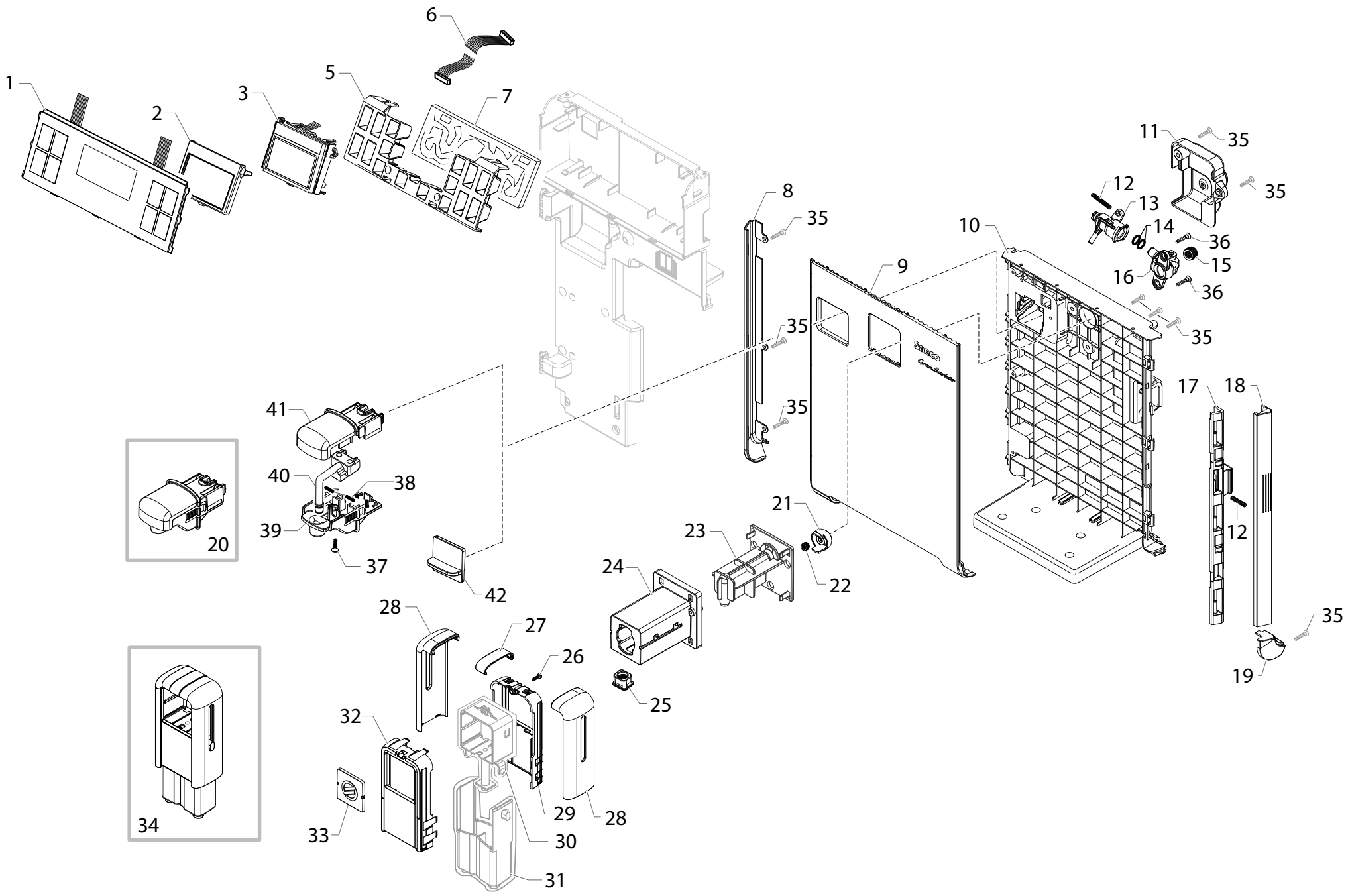

Saeco INTERNATIONAL GROUP

HD8964/01-05-08-47 HD8964/47
HD8965/01 HD8966/01-05-06
HD8966/08-11-13-16-47 HD8966/47

Cod. 10004234-882896405710-6408150-6447540-882896447740
Cod. 882896501010-10004434-882896605710-6606470
Cod. 882896608150-6611010-6613530-6616660-6647540-882896647740

POS	CODE	12NC	DESCRIPTION	NOTE
01		421941301281	TRANSP.FRONT CASING S/SCR.CST ASSY.	
		421944033481	TRANSP.FRONT CASING S/SCR.V2 CST ASSY.	
			HD8964/47 (882896447740) HD8966/47 (882896647740)	
02	17001439	996530073706	BLACK DISPLAY SEAL CST	
03	11031168	996530073686	DISPLAY LCD 160x80 CST	
05		421944032951	WHT GUIDE LIGHT FRONT CASING V2 CST	
06	17800579	996530073759	10POLES CPU-PWR FLAT CABLE CST	
07		421941303501	CPU+SW CST/B ASSY.	
	11027374	996530073719	CPU+SW CST/T ASSY.	STEEL MODELS
		421941307471	CPU+SW CST/B V2 ASSY.	
			HD8964/47 (882896447740)	
		421941307441	CPU+SW CST/T V2 ASSY.	
			HD8966/47 (882896647740)	
08		421941301681	BLK DOOR LEFT INSERT CST	
		421941301651	CHROM.DOOR LEFT INSERT CST	
09		421944030381	ANT.DOOR COVER S/SCR.V2 CST/H	
		421944030412	SS DOOR COVER S/SCR+LOG.SAE V3 CST/HM AS	
			All except HD8964/01-05-08-47	
10		421944026892	BLK DOOR V3 CST	
11		421944007781	BLK STEAM CONNECTOR COVER CST	
12	17000006	996530009559	TWO WAY TEFLON TUBES SUPPORT SPRING MYB9	
13		421944007791	BLK CARAFE CONNECTOR INSERT CST	
14	12000621	996530007857	O-RING 2031 EPDM	
15		421944000271	BLK VALVE/BOILER WATER TUBE SEAL V2 CST	
16		421944007801	BLK CARAFE CONNECTOR INSERT SUPPORT CST	
17		421944000062	BLK BUTTON FOR DOOR RELEASE V2 CST	
18		421941301671	BLK DOOR RIGHT INSERT CST	
		421941301641	CHROM.DOOR RIGHT INSERT CST	
19		421941301661	BLK DOOR CLOSING RIGHT INSERT CST	
		421941301631	CHROM.DOOR CLOSING RIGHT INSERT CST	
20		421941302161	BLK HOT WATER DISPENSER CST ASSY.	
21	149213450	996530018123	BLK CAP FOR REAR COF.DISPENSER TUBE	
22	11013789	996530006858	BLACK EV CONNECTOR SEAL MYB9	
23	17001706	996530073773	BLACK COFFEE DISPENSER TUBE CST	
24		421941301231	CHROM.COF.DISPENS.SUPPORT CST	
25	11013072	996530006604	BLACK SEAL FOR COFFEE DISPENSER MYB9	
26	129913702	996530013162	SCREW TCB TORX10 2,5X8 PLAST.ZN-B	

POS	CODE	12NC	DESCRIPTION	NOTE
27		421941301181	CHROM.COF.DISPENS.UPPER INSERT CST	
28		421941301171	CHROM.COF.DISPENS.FRONT INSERT CST	
29	17001712	996530073755	BLACK.REAR COVER COFFEE DISPENSER CST	
		421941304011	GRY COF.DISPENS.REAR COVER CST	
30		NOT AVAILABLE	BLACK COFFEE DISPENSER INNER BODY CST	SEE POS. 34
31		NOT AVAILABLE	BLACK EXT.MOBILE PART COF.DISPENSER CST	SEE POS. 34
32	17001709	996530073725	BLACK FRONT COF.DISPENSER COVER CST/H	
32		421941301211	SS COF.DISPENS.FRONT COVER CST/HM ASSY.	
33		421941301241	BLK COF.DISPENS.SUPP.CAP S/SCR.CST/H	
		421944038491	SB/SS COF.DISPENS.SUPP.CAP V3 CST/HM AS.	
34		421944029571	BLK COF.DISPENS.V2 CST ASSY.	
		421944029501	SB/SS COF.DISPEN.V2 CST/HM ASSY.	
35	12001728	996530070321	SCREW TCBR TORX 10 3,5X12 PLAST.SS	
36	12000450	996530007819	SCREW TCBR TORX 10 3,5X12 PLAST.ZN-N	
37	129913902	996530013164	SCREW TCB TORX 10 3X12 PLAST.ZN-B	
38	11005395	996530002873	STEEL MILK CONTAINER SUPPORT SPRING P124	
39		421944004851	BLK LOWER BODY HOT WATER DISPEN.CST	
40	17001215	996530069842	BLACK HOT WATER DISPENSER TUBE NPR/T	
41		421944004841	BLK UPPER BODY HOT WATER DISPEN.CST	
42		421944026761	CHR.CONNECT.CAP FOR CARAFE CST ASSY.	
			HD8964/47 (882896447740) HD8966/47 (882896647740)	

Exp. E74190 Rev.07 03/11/15

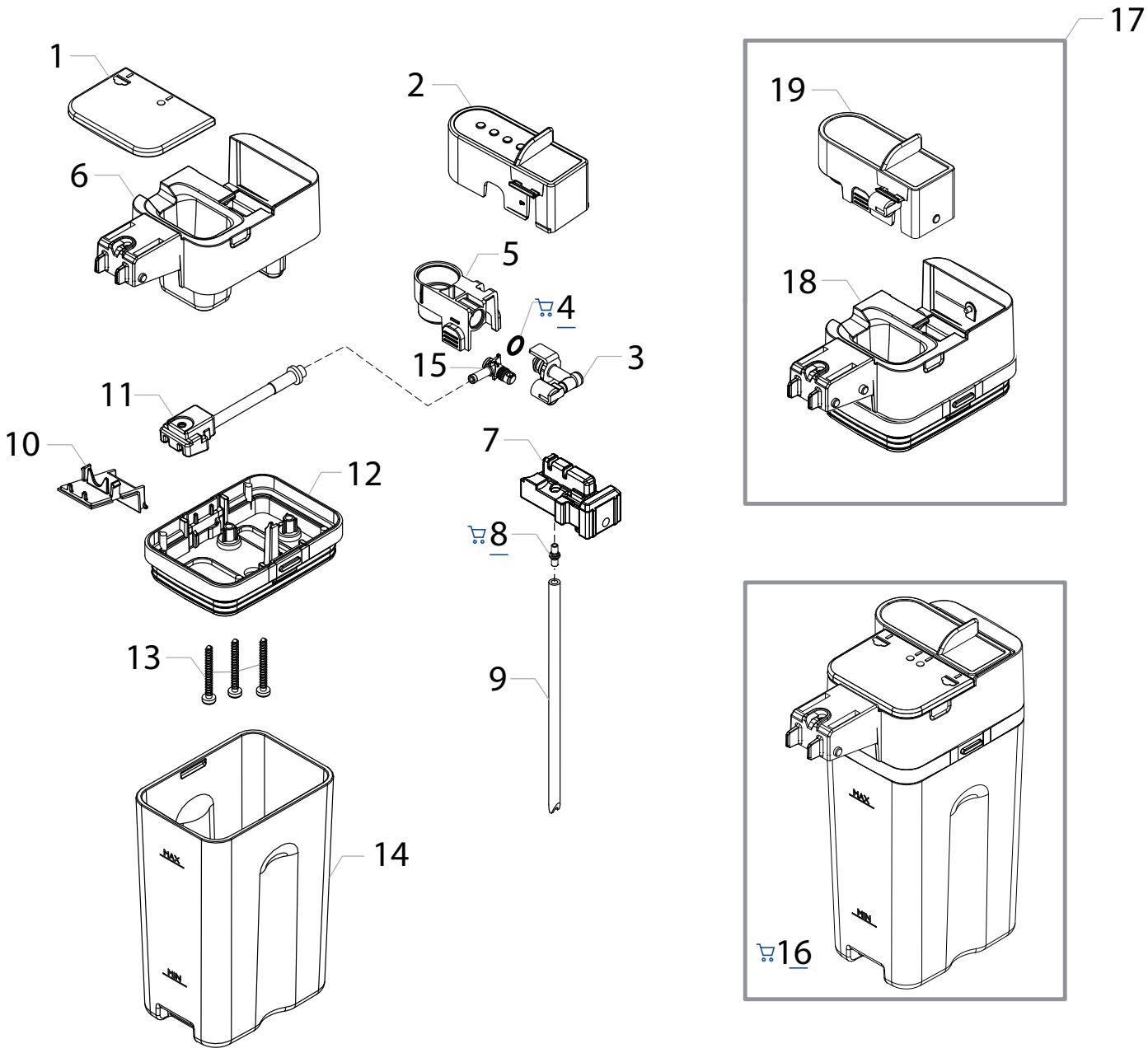

Saeco INTERNATIONAL GROUP

HD8964/01-05-08-47 HD8964/47
HD8965/01 HD8966/01-05-06
HD8966/08-11-13-16-47 HD8966/47

Cod. 10004234-882896405710-6408150-6447540-882896447740
Cod. 882896501010-10004434-882896605710-6606470
Cod. 882896608150-6611010-6613530-6616660-6647540-882896647740

POS	CODE	12NC	DESCRIPTION	NOTE
01		421944007561	BLK CARAFE COVER PLUG SMR/T	
02	17002208	996530073643	MATT/BLK CARAFE CAPPUC.COVER SMR/T	
			TO S/N TU901430106019	
		NOT AVAILABLE	**FROM S/N TU901430106020**	**SEE POS. 19**
03		421944035641	BLK CARAF.OUT.STEAM CON.D1,3 V2 SMR/T AS	
04	NM01.028	996530059392	O-RING 106 SILICONE	
05	17001985	996530073573	BLACK CARAFE CAPPUC.CASING HGO/T	
06		**NOT AVAILABLE**	BLACK UPPER COVER PART CARAFE SMR/T	
			TO S/N TU901430106019	**SEE POS. 17**
		NOT AVAILABLE	**FROM S/N TU901430106020**	**SEE POS. 18**
07	17002052	996530073606	BLK CARAFE MILK INLET BODY HGO/T	
			TO S/N TU901430106019	
		NOT AVAILABLE	**FROM S/N TU901430106020**	**SEE POS. 19**
08	17001362	996530068626	BLK MILK INTAKE TUBE CONNECT.INS.V2 RYL	
09	11012814	996530067584	SILICONE TUBE 3,5X6 L=140 MM	
10		421944030721	BLK CARAF.REAR COVER INSERT V2 NOR NPR/T	
11	17002211	996530073579	BLACK CARAFE MILK DISPENSER TUBE SMR/T	
12		421944007641	BLK CARAFE LOWER COVER PART SMR/T	
			TO S/N TU901430106019	
		NOT AVAILABLE	**FROM S/N TU901430106020**	**SEE POS. 18**
13	12000897	996530007953	SCREW TCB TORX 10 3,5X20 PLAST.SS	
14		421944032881	TRANSP.D/GREY PH-11514 CARAFE V2 HGO/T	
15		421944006961	BLK CARAFE STEAM INPUT CONN.SMR/T ASSY.	
16		421944029452	TRANSP/BLK GEN.CARAFE SLID.V2 SMR/T ASSY	
17		421940813181	KIT SPARES BLK UPPER COV.PAR.CARAF.SMR/T	
			TO S/N. TU901430106019	
18		421941307041	KIT SPARES BLK UPP.COV.SERVO CAR.SMRT/T	
			FROM S/N. TU901430106020	
19		421941307191	KIT SPAR.BLK CAP.COV.SERVO CAR.SMRT/T AS	
			FROM S/N. TU901430106020	

POS	CODE	12NC	DESCRIPTION	NOTE

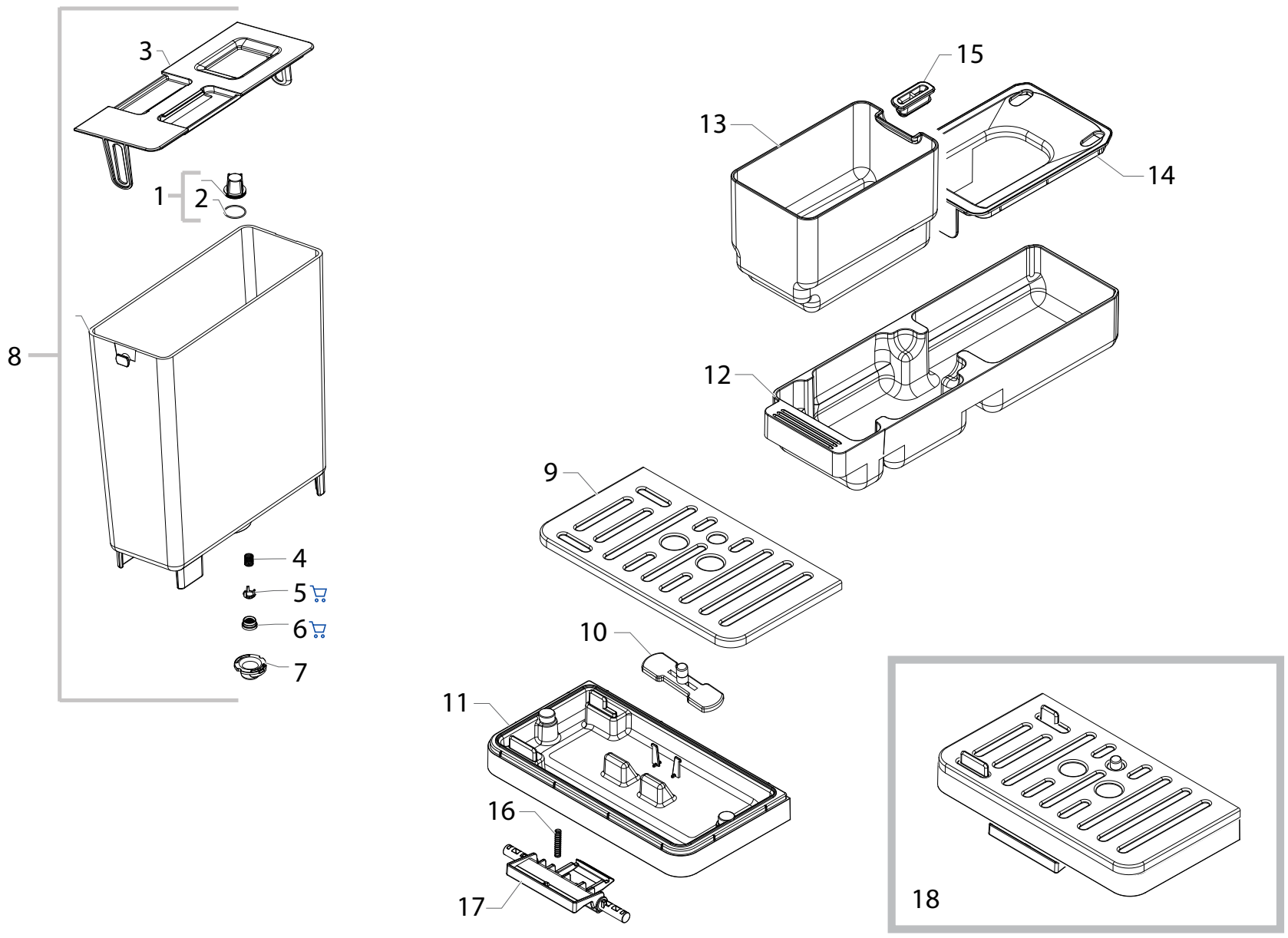

Saeco INTERNATIONAL GROUP

HD8964/01-05-08-47 HD8964/47
HD8965/01 HD8966/01-05-06
HD8966/08-11-13-16-47 HD8966/47

Cod. 10004234-882896405710-6408150-6447540-882896447740
Cod. 882896501010-10004434-882896605710-6606470
Cod. 882896608150-6611010-6613530-6616660-6647540-882896647740

POS	CODE	12NC	DESCRIPTION	NOTE
01	224640200	996530029115	WHITE WATER CONTAINER EXT.FILTER ASSY.	WITH PART.N°2
02	140328461	996530013571	OR ORM 0190-10 EPDM	
03		421944000221	NAT/GRY WATER CONTAINER HANDLE V2 CST	
04	11003672	996530001831	SS SPRING FOR WATER CONTAIN.VALVE P0049	
05		421941157852	GRY WATER CONTAINER VALVE INSERT P0049	
06	11003671	996530001829	TRANSP.VALVE FOR WATER CONTAINER P0049	
07	17001366	996530073463	BLACK LID FOR DUCKBILL VALVE SMR	
08	17001736	996530073774	WATER CONTAINER CST ASSY.	
09	17001714	996530073781	SS DRIP TRAY GRATE CST	
10		421944003041	RED/BLK FLOAT FOR DRIP TRAY CST	
		421941306131	RED/WHT FLOAT FOR DRIP TRAY CST	MID /SS
11	17000947	996530073792	BLACK DRIP TRAY CST ASSY.	
			TO S/N. TU901423080806	
		421944028622	BLK DRIP TRAY V3 CST ASSY.	
			All except HD8966/01-05-06-08	
			FROM S/N. TU901423080807	
		421941301591	WHT DRIP TRAY CST ASSY.	
			TO S/N. TU901423080806	
		421944030112	WHT DRIP TRAY V3 CST ASSY.	
			Only for HD8966/01-05-06-08	
			FROM S/N. TU901423080807	
12	17001905	996530073696	BLACK COFFEE UNIT DRIP TRAY CST	
13	17000946	996530073701	BLACK DUMP BOX CST ASSY.	
14		421944016031	BLK DRIP TRAY COF.BREW UNIT COVER V2 CST	
15		421944015541	DRIPTRAY COF.BREW UNIT COVER SEAL V2 CST	
16	17000006	996530009559	TWO WAY TEFLON TUBES SUPPORT SPRING MYB9	
17		421944028551	LEV.HOOK FOR RECOV.TAN. WAT.V2 CST	
18		421941307341	KIT SPARES BLK DRIP TRAY V2 CST ASSY.	
			All except HD8966/01-05-06-08	
		421941307351	KIT SPARES WHT DRIP TRAY V2 CST ASSY.	
			Only for HD8966/01-05-06-08	

POS	CODE	12NC	DESCRIPTION	NOTE

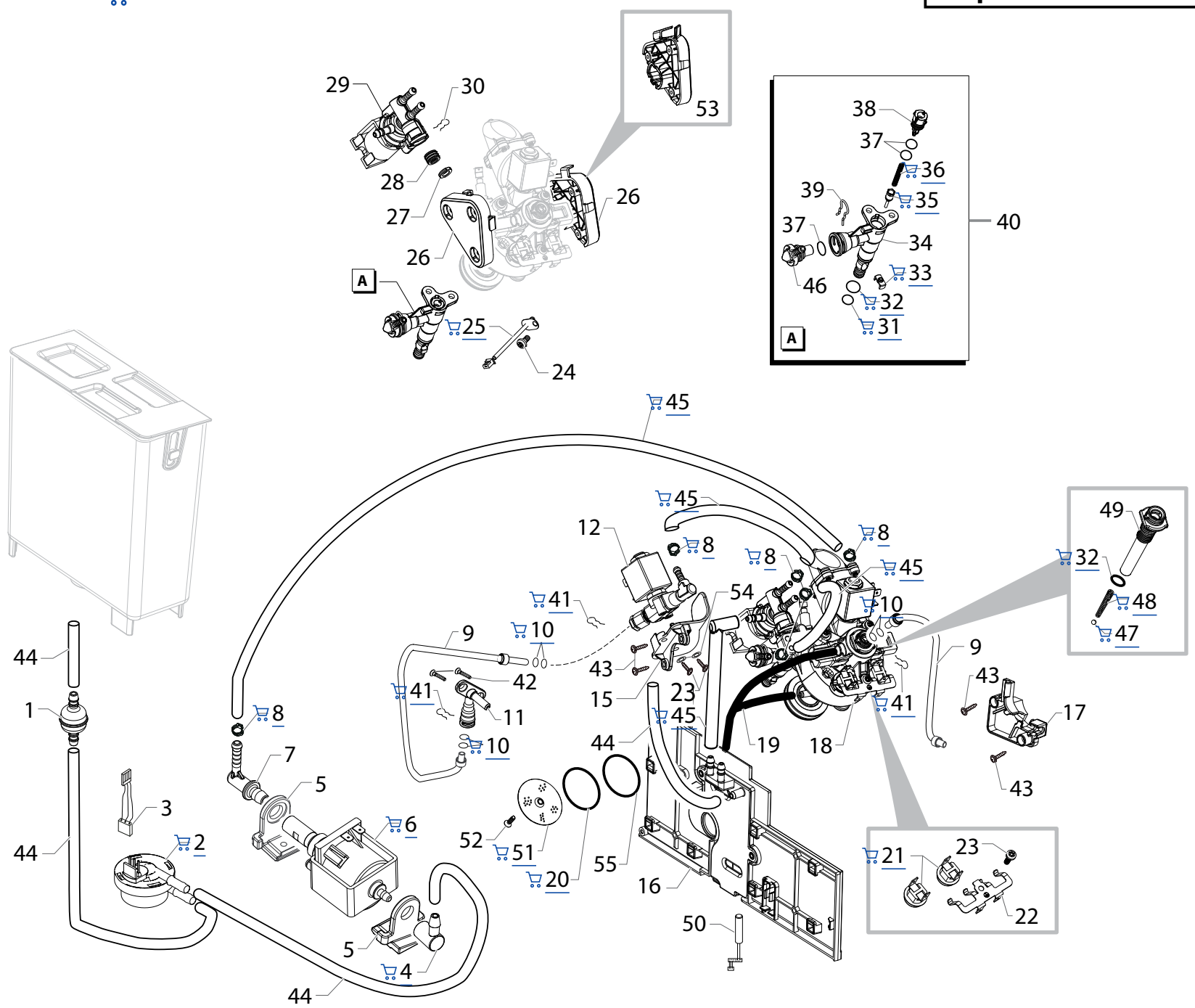

Saeco INTERNATIONAL GROUP

HD8964/01-05-08-47 HD8964/47
HD8965/01 HD8966/01-05-06
HD8966/08-11-13-16-47 HD8966/47

CE

Cod. 10004234-882896405710-6408150-6447540-882896447740
Cod. 882896501010-10004434-882896605710-6606470
Cod. 882896608150-6611010-6613530-6616660-6647540-882896647740

POS	CODE	12NC	DESCRIPTION	NOTE
01	12001595	996530067498	TRANSP/WHITE ASPIRATION FILTER MDS	
02	NV99.099	996530059843	TURBINE D=1,2 932-8521/00 ASSY.	
03	17800446	996530073716	6POLES CONNECT.DRIP TRAY+FLOWMETER CST	
04	147920150	996530017348	90° INLET PUMP CONNECTOR	
05	17001235	996530073716	BLACK PUMP SUPPORT CST	
06	12000140	996530007753	ULKA PUMP EP5/S GW	230V-50HZ
	12000142	996530007754	ULKA PUMP EAP5/S 120V-60HZ	120V-60HZ
07	17002000	996530073716	BLK PUMP OUTLET CH12 90°CONNECTOR CST	
08	12000892	996530007947	OETIKER CLAMP D=9,5 16700004	
09		421941305021	TEFLON TUBE 2X4 L=220 MM ASSY.	
10	140328059	996530013564	OR 2015 SILICONE PTFE/FDA	
11		421944007811	BLK OUTPUT STEAM TUBE CONNECTOR CST	
12		421944033041	SOLENOID VALVE V2 CST 24V ASSY.	
15	17001697	996530073763	BLACK SOLENOID VALVE SUPPORT CST	
16		421944015991	BLK BREW UNIT LEFT SUPP.PLATE V2 CST ASS	
17	17001758	996530073763	BLACK TEFLON TUBE SUPPORT CST	
		421944031421	BLK TEFLON TUBE SUPPORT V2 CST	
			HD8964/47 (882896447740) HD8966/47 (882896647740)	
18		421944033851	PISTON UNIT V4 CST 230V ASSY.	
		421944033871	PISTON UNIT V2 CST 120V ASSY.	
19	17001902	996530073741	TRANSP.DRAIN OIL CONNECTOR CST	
20	NM01.044	996530059406	OR ORM 0320-40 SILICONE PTFE/FDA	
21	12001033	996530007973	THERMOSTAT ONE SHOT 190°	
22	17001521	996530073785	TUB.BOILER THERMOST.FIXING SPRING CST	
23	129583102	996530012941	SCREW TCB M4X12 AUTOFORMING ZN-B	
24	129573202	996530012921	SCREW TCB TORX 20 M4X8 AUTOFORMING ZN-B	
25	17800628	996530073428	TEMPERATURE SENSOR NTC UL L=550MM	
26		421944032331	BLK PISTON UNIT UPPER PART SUPP.V2 CST	
27		421944000281	WHT BOILER TUBE SPACER V2 CST	
28		421944000271	BLK VALVE/BOILER WATER TUBE SEAL V2 CST	
29		421944001171	BLOWDOWN VALVE V2 CST 24V ASSY.	
30		421944000261	SS FORK FOR TUBE D=6,25	
31	NM01.057	996530059419	OR ORM 0050-20 IN SILICONE	
32	NM01.035	996530059399	OR ORM 0090-20 SILICONE	
33	11005099	996530002747	NATURAL CURSOR V2 FOR BOILER P119	
34	17001777	996530073785	NAT.PIN FOR BOILER CST	
35	11009019	996530005183	TEA/BRASS PISTON L=20,9 ASSY.	

POS	CODE	12NC	DESCRIPTION	NOTE
36	9011.132	996530048874	SS SPRING FOR PIN	
37	12000621	996530007857	O-RING 2031 EPDM	
38	17001778	996530073745	BLACK CAP FOR PIN BOILER CST	
39	11005096	996530002744	SS FORK SPRING FOR BLOWDOWN VALVE P0049	
40	17001776	996530073687	PIN FOR BOILER CST ASSY.	
41	9011.144	996530048885	SS FORK FOR TUBE D=4	
42	12001787	996530073717	SCREW TCBR TORX 10 3X8 PLAST.SS	
43	12001622	996530068586	SCREW TCB TORX B 3,5X9,5 SCHEET NIK	
44	JS01.022	996530057357	SILICONE TUBE 5X10 60SH	IN ROLL
45	16000380	996530009505	5X8,9 SILICONE TUBE	IN ROLL
46		421941200532	BLK BLOWDOWN VALVE CAP V2 MYB9	
47		421944034451	BOROSILICATE SPHERE D.5 MM	
48	9161.222	996530050657	SS.CONICAL SPRING	
49	17001769	996530073778	BLK PISTON UNIT COFF.OUTLET CONNECT.CST	
50	17800442	996530073661	2POLES CONNECT.SENSOR REED DUMP BOX CST	
51	9161.268	996530050709	PERCOLATOR DE=35,8 ELFO	
52	12000895	996530007951	SCREW TSP TORX 10 3X10 PLAST.SS	
53		421944032332	BLK PISTON UNIT UPPER PART SUPP.V3 CST	
			FROM S/N. TU901446163585	
54	128310404	996530012342	WASHER UNI 8842 A4 BURNISHED	
55	12000181	996530007781	OR METRIC 0340-30 IN SILICON	

Exp. E74190 Rev.07 03/11/15

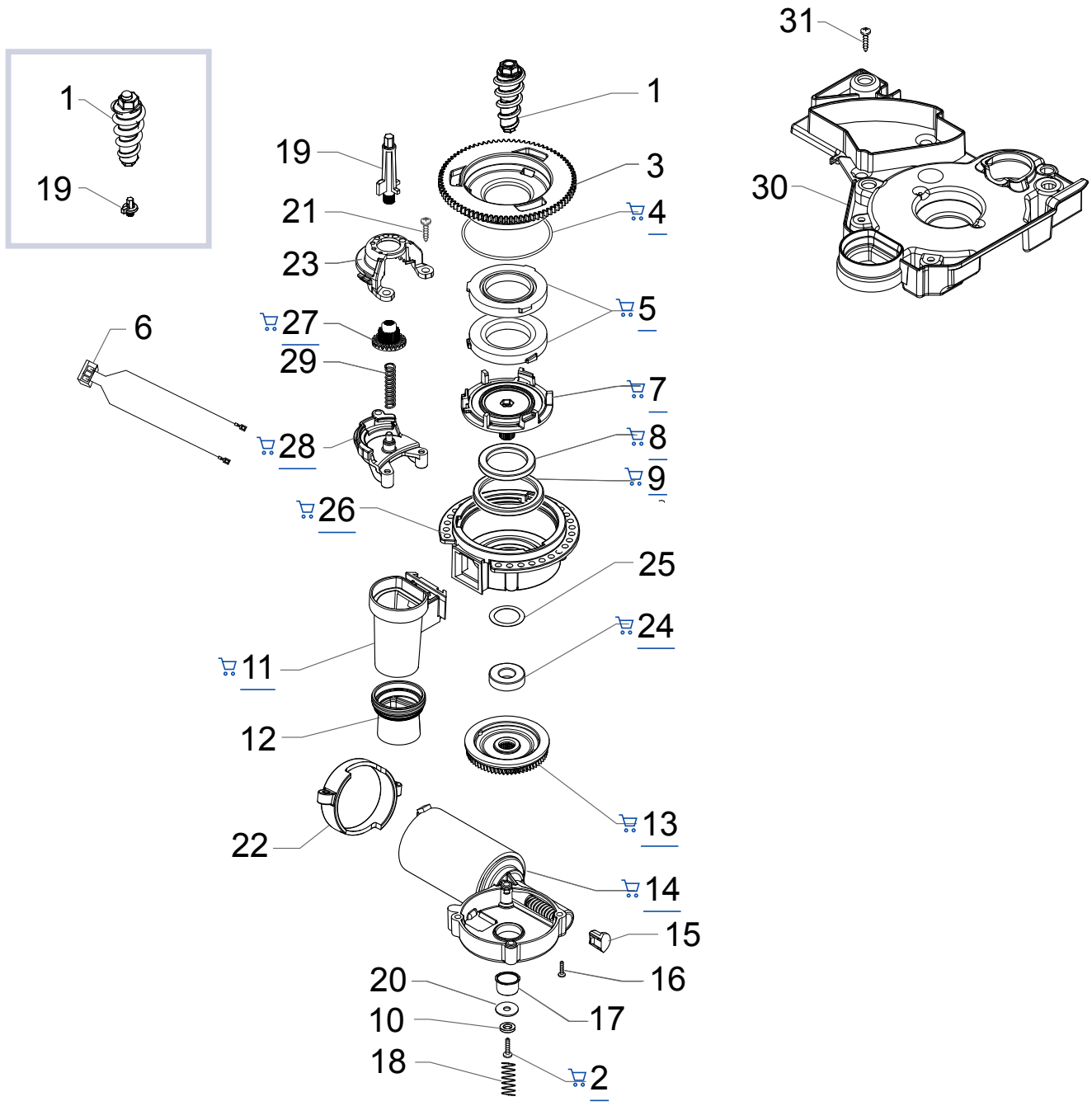

Saeco INTERNATIONAL GROUP

HD8964/01-05-08-47 HD8964/47
HD8965/01 HD8966/01-05-06
HD8966/08-11-13-16-47 HD8966/47

Cod. 10004234-882896405710-6408150-6447540-882896447740
Cod. 882896501010-10004434-882896605710-6606470
Cod. 882896608150-6611010-6613530-6616660-6647540-882896647740

POS	CODE	12NC	DESCRIPTION	NOTE
01	11011205	996530005991	TEA ZAMA INCREASE SCREW GRINDER	
		421944038321	TEA/ZAMA GRIND.INCREASE SCREW V2 CST AS	STEEL WHITE ONLY
02	129574802	996530012928	SCREW TCB TORX 20 M4X30 ZN-B	
03		421941094152	BLK COF.GRINDER UPPER GRINDER SUPPORT V2	
04	140328960	996530013577	OR ORM 0530-15 NBR FDA	
05	146520100	996530016342	BAKED CLAY GRINDER 48X28	
06	17800450	996530073694	2POLES CONNECTOR GRINDER MOTOR CST	
07	149198350	996530017952	BLK LOWER COFFEEGRINDER GRINDER SUPPORT	
08	123030300	996530011183	AXIAL BEARING EKKO 342.35252	
09	140360500	996530013597	FELT RING 45,4X39,4X4	
10	128310402	996530068049	GALV.WASHER UNI 8842 A4	
11	11026355	996530068049	BLK GROUND COFF.OUTLET CONVEYOR V4 ASSY.	
12	17001261	996530073695	TRANSP.GROUND COFFEE CONT.LOWER SEAL CST	
13	226000300	996530029609	GEAR SX Z=38 FOR GRINDER MOTION ASSY.	
14	11000513	996530000317	MOTOR COFFEEGRINDER V3.1 230V ASSY.	
		421941305001	MOTOR COFFEEGRINDER V3.1 120V ASSY.	
15	149214800	996530018139	MC V3 MOD=1,25 WORM SCREW CENTRING CAP	
16	129661702	996530012992	SCREW TCB TORX 3,5X30 PLAST.ZN-B	
17	11002873	996530001389	INSULATOR BUSH FOR GRINDER MOTOR P124	
18	11000597	996530000376	STEEL COF.GRINDER SUPPORT SPRING P124	
19		421944012702	BLK BEAN COFFEE GRINDER INSERT V2 CST/B	
		421944001091	INS.REG.MACINAT.CAF.GRA.HGO GIA.	STEEL WHITE ONLY
20	128381902	996530012375	STEEL FLAT WASHER DI=4,3 DE=14 SP=1,5	
21	129914002	996530013165	SCREW TCB TORX 10 3,5X16 PLAST.ZN-B	
22	11000194	996530000115	BLACK COFFEEGRINDER MOTOR SUPPORT P124	
23	11002508	996530001296	UPPER COFFEEGRINDER GEAR SUPPORT P124	
24	123030200	996530011182	RADIAL BEARING 61900.2RS1	
25	128381800	996530012374	STEEL CRINKLE WASHER 21,8X14X0,25	
26	142905450	996530015258	BLK UPPER BODY WITH COFFEE GROUND OUTLET	
27	11003784	996530001907	COFFEE GRINDING ADJUSTMENT GEAR P0049	
28	11002613	996530001314	LOWER COFFEEGRINDER GEAR SUPPORT P124	
29	11002572	996530001308	COFFEEGRINDER REGULATION SPRING P124	
30	17001681	996530073702	BLK COF.GRINDER SOUNDPROOFING COVER CST	
31	12000450	996530007819	SCREW TCBR TORX 10 3,5X12 PLAST.ZN-N	
	17001683	996530073737	GEN.MOTOR COFFEE GRINDER CST 230V ASSY.	
		421944038311	GEN.MOTOR COF.GRINDER V2 CST/HM 230V AS	STEEL WHITE ONLY

POS	CODE	12NC	DESCRIPTION	NOTE
		421944038331	GEN.MOTOR COF.GRIND.V2 CST/HM 120V ASSY.	120V

Exp. E74190 Rev.07 03/11/15

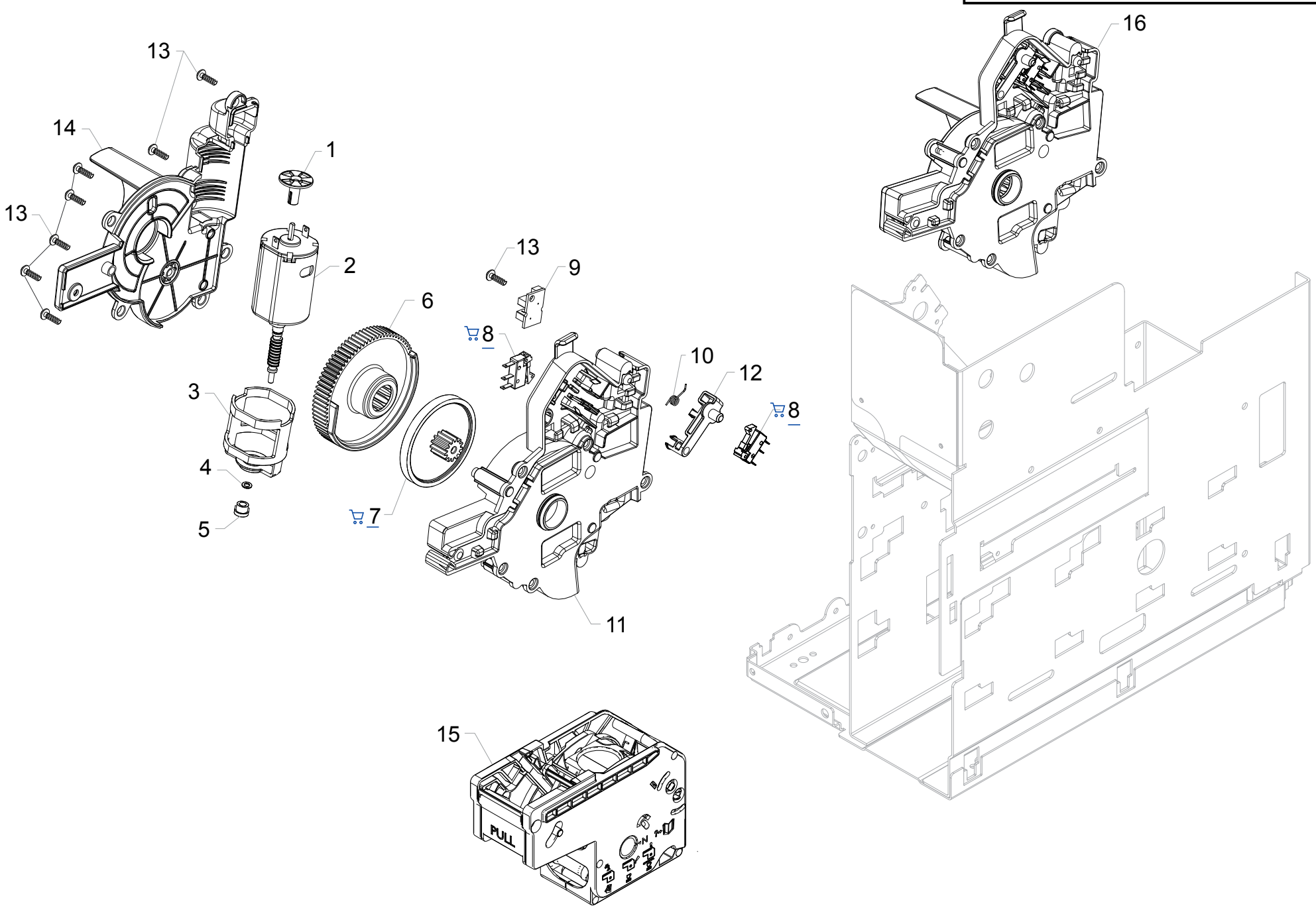

Saeco INTERNATIONAL GROUP

HD8964/01-05-08-47 HD8964/47
HD8965/01 HD8966/01-05-06
HD8966/08-11-13-16-47 HD8966/47

Cod. 10004234-882896405710-6408150-6447540-882896447740
Cod. 882896501010-10004434-882896605710-6606470
Cod. 882896608150-6611010-6613530-6616660-6647540-882896647740

POS	CODE	12NC	DESCRIPTION	NOTE
01	17000797	996530073711	BLACK ENCODER MOTOR INSERT CST	
02	17001611	996530073707	MOTOR FOR RATIOMOTOR CST ASSY.	
03	9121.044	996530049896	ANTIVIBRATION FOR MOTOR	
04	148380200	996530017424	BAKELIZZATE WASHER D=5,5	
05	9121.046	996530049898	BRONZE SINTERED BUSH FOR MOTOR RATIOMOT.	
06	17000800	996530073735	BLACK GEAR Z=77 FOR RATIOMOTOR CST	
07	146002800	996530016272	GREY GEAR Z=13/90 FOR RATIOMOTOR P124	
08	NE05.038	996530058869	MICROSWITCH SAIA XCG5-81-P5	
09	11027610	996530073742	GHEAR BOX ENCODER BOARD CST	
10	11013785	996530006856	STEEL TEFLON TUBES SUPPORT SPRING MYB9	
11	17000807	996530073689	BLK RATIOMOTOR CASING WITH PIN CST ASSY.	
12	17000798	996530073691	BLK BREW UNIT PRESENCE MICRO LEVER CST	
13	12000450	996530007819	SCREW TCBR TORX 10 3,5X12 PLAST.ZN-N	
14	17000795	996530073771	BLACK RATIOMOTOR COVER CST	
15		421944028571	BLK BREW UNIT V2 CST	
16	17000794	996530073697	BLACK RATIOMOTOR CST ASSY.	

POS	CODE	12NC	DESCRIPTION	NOTE

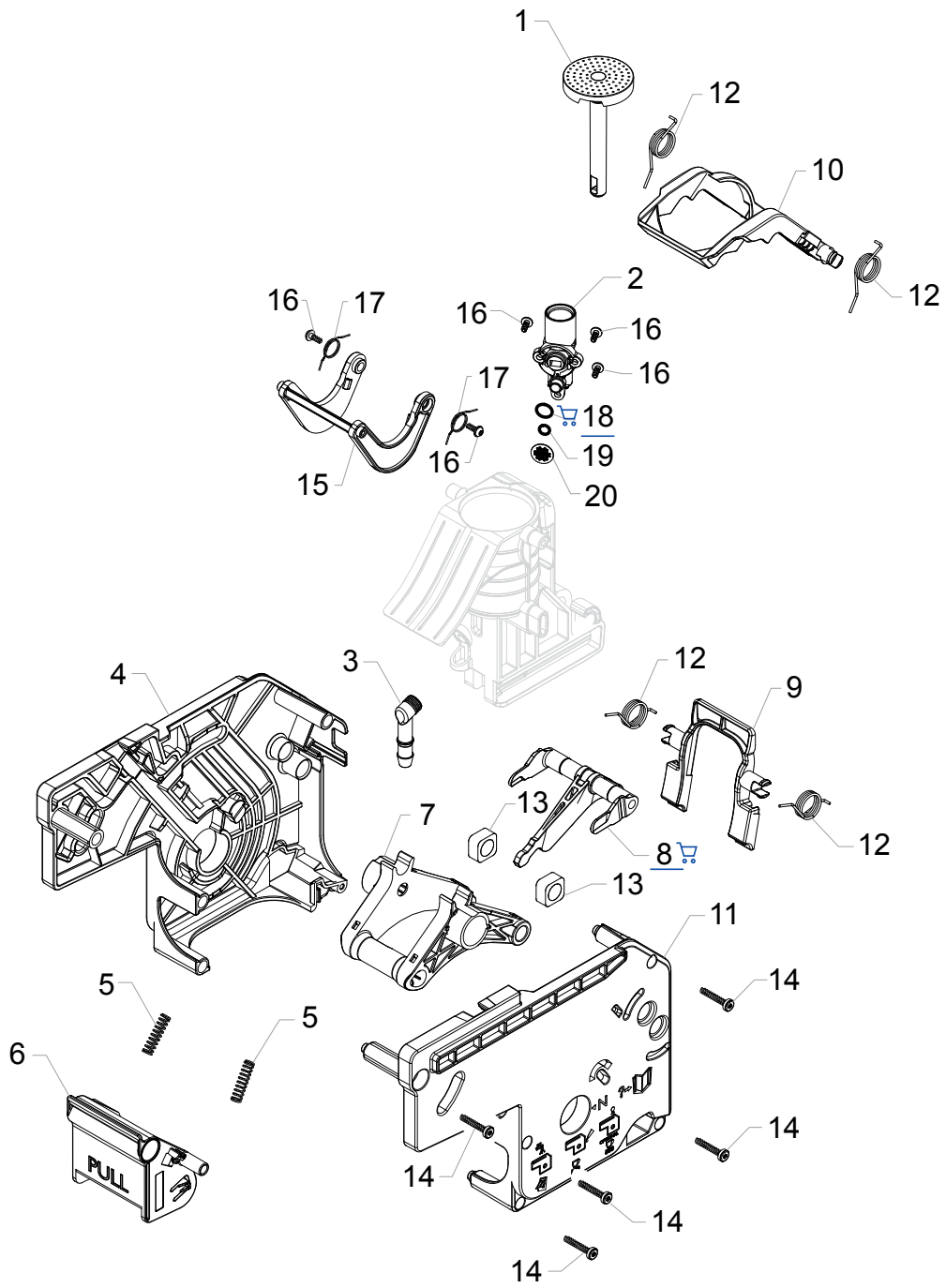

Saeco INTERNATIONAL GROUP

HD8964/01-05-08-47 HD8964/47
HD8965/01 HD8966/01-05-06
HD8966/08-11-13-16-47 HD8966/47

Cod. 10004234-882896405710-6408150-6447540-882896447740
Cod. 882896501010-10004434-882896605710-6606470
Cod. 882896608150-6611010-6613530-6616660-6647540-882896647740

POS	CODE	12NC	DESCRIPTION	NOTE
01	17000764	996530073722	BLK BREW UNIT INTEGRAL PISTON CST ASSY.	
02	17000757	996530073789	BLACK BREW UNIT WATER INLET SLEEVE CST	
03	17001293	996530073729	BLK BREW UNIT DRAIN COFFEE CONNECT.CST	
04	17000751	996530073727	BLACK BREW UNIT LEFT PLATE CST	
05	17000006	996530009559	TWO WAY TEFLON TUBES SUPPORT SPRING MYB9	
06	17000767	996530073728	BLACK BREW UNIT COUPLING LEVER CST	
07	17000753	996530073766	BLACK BREW UNIT ELBOW SHAFT CST	
08	17000754	996530073714	BLACK BREW UNIT CONNECTING ROD CST	
09	17000768	996530073768	BLACK BREW UNIT LOCKING LEVER CST	
10	17000755	996530073705	BLACK BREW UNIT PISTON SCRAPER CST	
11	17000752	996530073704	BLACK BREW UNIT RIGHT PLATE CST	
12	17000765	996530073713	SS BREW UNIT COUNTERP.SCRAPER SPRING CST	
13	9161.094.050	996530050539	BLACK BREW UNIT DRILLED BLOCK	
14	12000897	996530007953	SCREW TCB TORX 10 3,5X20 PLAST.SS	
15	17000756	996530073767	BLK BREW UNIT COUNTERPISTON SCRAPER CST	
16	12001787	996530073767	SCREW TCBR TORX 10 3X8 PLAST.SS	
17	17000766	996530073733	SS BREW UNIT PISTON SCRAPER SPRING CST	
18	NM01.035	996530059399	OR ORM 0090-20 SILICONE	
19	12000070	996530007732	OR ORM 0060-15 SILICONE	
20		421944015931	SS COF.FILTER HOLES D=1 BREW UNIT CST	
		421944028571	BLK BREW UNIT V2 CST	

POS	CODE	12NC	DESCRIPTION	NOTE