Щоб переглянути та придбати необхідну запчастину, натисніть на її номер на малюнку, або на її номер, назву у таблиці з позначкою 🛒

Exp. E74082 Rev.08

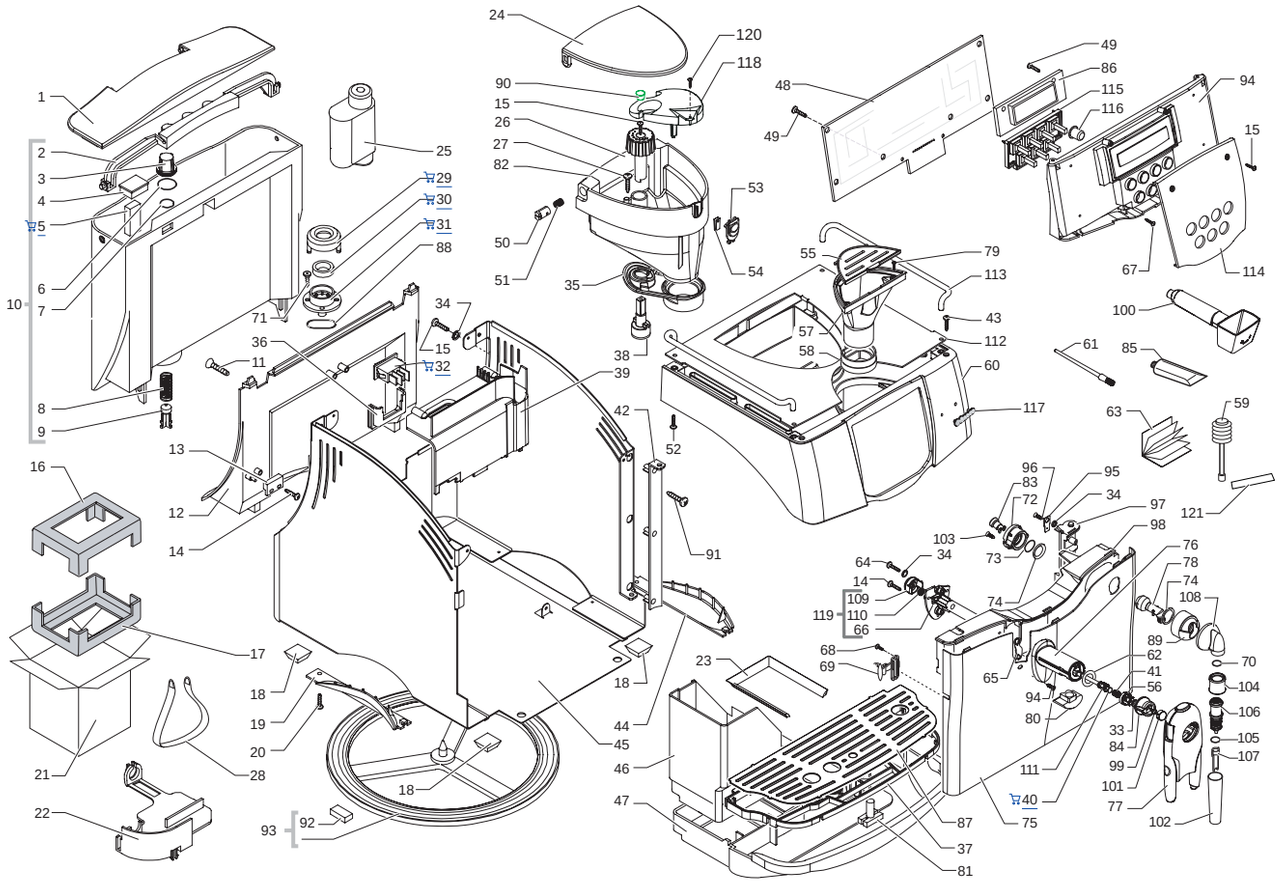

Saeco INTERNATIONAL GROUP **SUP021YBDR** CE **Cod.740825-26-10000112-2292**

POS	CODE	DESCRIPTION	NOTE
01	142816500	WATER CONTAINER LID SMART NAT./GREY	
02	146580950	BLACK KNOB WATER CONTAINER LID SMAR	
03	224640200	EXTERNAL FILTER FOR WATER CONTAINER ASSY	WITH PART.N°06
04	149214359	BLACK CAP FOR FLOATING SPACE LAV.	
05	9161.112.150	LEVEL FLOAT GREY	
06	140328461	EPDM OR METRIC 0019-10	
07	140324362	OR METRIC 0060-30 IN SILICONE	
08	126764718	SPRING FOR WATER CONTAINER VALVE	
09	147660562	GREY PISTON FOR WATER VALVE	
10	226476300	KIT WATER CONTAINER SMART NATURAL/GREY	
11	12000381	SCREW TSP PZ2/TT M3X8 UNI 8109 ZINC	
12	149194650	SUPPORT WATER CONT. W/O LAMP HOUSING	
	149194618	SUPPORT WATER CONT. W/O LAMP HOUSING	
13	283551900	2 POLE LEVEL SENSOR AS.SMART	230V
	283551955	2 POLE LEVEL SENSOR AS.SMART	120V -220V
14	129532521	SCREW TSP2,9X9,5 DIN 7982 SS	
15	129913902	SCREW TCB TORX 10 3X12 PLAST.ZN-B	
16	175898600	UPPER TECHMATE INSERT FOR BOX SMART1	
17	175897300	LOWER TECHMATE INSERT FOR BOX SMART	
18	147623150	SQUARE ADHESIVE FOOT 5023 BLACK	
19	225920225	HANGRIP SX SMART SILVER A2	
	225920208	HANGRIP SX SMART CHROMED	
20	129912902	SCREW TCB TORX 10 2,9X6,5 SHEET ZN-B	
21	178517600	DISPLAY BOX SAECO INCANTO S-CLASS	
22	148601650	GROMMET FOR POWER CABLE SMART	
23	229170450	SEALING SUPPORT AS.WATER DRIP TRAY	
24	142816700	BEAN COFF.CONT.LID SMART NATUR/GREY	
25	21000961	ACC SAE BRITA WATER FILTER 1 UNIT EUR	
	21001120	ACC SAE BRITA WATER FILTER 1UNIT AMERIC.	U.S.A.
	21001123	ACC SAE BRITA WATER FILTER 1 UNIT ASIA	
26	227721800	GRIND.ADJUST.NATGREY KNOB SMART S/S	
27	U142.005	PANELVIT TSP 4,5X16 DIN 7505 A GAL	
28	179990300	BAND FOR LIFTING L=1550 H=300 MM	
29	0701.031.150	SEAL COVER GREY	
30	145842900	WATER CONTAIN.VALVE SEAL GACO DIM14	
31	0701.014.150	SEAL CONTAINER GREY	
32	NE03.038	BIPOLAR SWITCH FUSIT C1250AR	
33	U207.003	PLAIN WASHER 3,2X7 UNI 6592 GAL	
34	128310321	WASHER UNI 8842 A3 SS	
35	145854760	BEAN COFFEE CONTAINER SEAL SMART	
36	149202550	SWITCH GENERAL SUPPORT BLACK SMART	

POS	CODE	DESCRIPTION	NOTE
37	229183726	SILVER A13 SUPPORT GRATE METAL SMART	
	229183750	BLACK SUPPORT GRATE METAL SMART	
38	145897300	INSERT GRINDING ADJUSTM.KNOB SMART	
39	147755800	INT.CASING PROTECTION POWER CABLE	
40	140326661	OR METRIC 0040-20 IN EPDM	
41	126772518	SPRING FOR CREAM ADJUSTMENT SHAFT	
42	226481426	DOOR HINGE KIT SMART SILVER A13	
		UP TO S/N 9005SA40022836	
	222630526	DOOR HINGE SMART SILVER A13	
		FROM S/N 9005SA40022837	
	226481450	DOOR HINGE KIT SMART BLACK	
		UP TO S/N 9005SA40022836	
	222630550	DOOR HINGE SMART BLACK	
		FROM S/N 9005SA40022837	
43	U143.018	SCREW TORX TCB 3,5X16 F TIP BL	
44	225920125	HANGRIP DX SMART SILVER A2	
	225920108	HANGRIP DX SMART CHROMED	
45	11001021	MATT SILVER CASING SMART	
	222360450	CASING WITH KNOB SMART BLACK	
46	11005555	BLACK DUMP BOX SMART SILK/SCREEN	
47	229630826	SILVER A13 DRIP TRAY SMART	
	229630850	BLACK DRIP TRAY SMART	
48	281565158	ELECT.BOARD CPU SMART SUP021YBDR ASSY.	WITH PART.N°115
49	129913202	SCREW TCB TORX 10 3X8 PLAST.ZN-B	
50	147472750	PIN FOR DEADLOCK SPRING SMART1 DIG.	
51	126838818	SPRING FOR BEAN COFFEE CONTAINER	
52	U046.003	SCREW TCBC M4,0X12 INDENT. WASH.8	
53	149252850	OPENING BUTTON BEAN CONTAINER COFFE	
54	126838918	SPRING FOR BUTTON BEAN CONTAINER COF.	
55	222802400	GROUND COF.CONT.LID CLASSIC NATGREY	
56	149198700	SUPPORT CREAM ADJUSTMENT SHAFT	
57	149261500	HOPPER GROUND COFFEE DOSER SMART	
58	145854360	GROUND COFFEE CONT.SEAL UPPER SMART1	
59	147700200	POMPA DI CARICAMENTO DIAM.EST.17 MM	U.S.A.
60	222813826	SILVER 13 COVER SMART SILK/SCREEN DLX	
	222813850	BLACK COVER SMART SILK/SCREEN DELUXE	
	11001861	SILVER 13 COVER SMART/UL S/SCREEN DLX	KOREA
	222847926	SILVER 13 COVER SMART SILK/SCREEN DLX	COMPLETE
	222847950	BLACK COVER SMART SIL/SCREEN DELUXE	COMPLETE
	11001860	SILVER 13 COVER SMART/UL S/SCREEN DLX	KOREA COMPLETE
	11007666	AS.COP.SMART/NT UL C/AP.A13/120V SER.DLX	U.S.A. COMPLETE

Щоб переглянути та придбати необхідну запчастину, натисніть на її номер на малюнку, або на її номер, назву у таблиці з позначкою 🛒

Exp. E74082 Rev.08

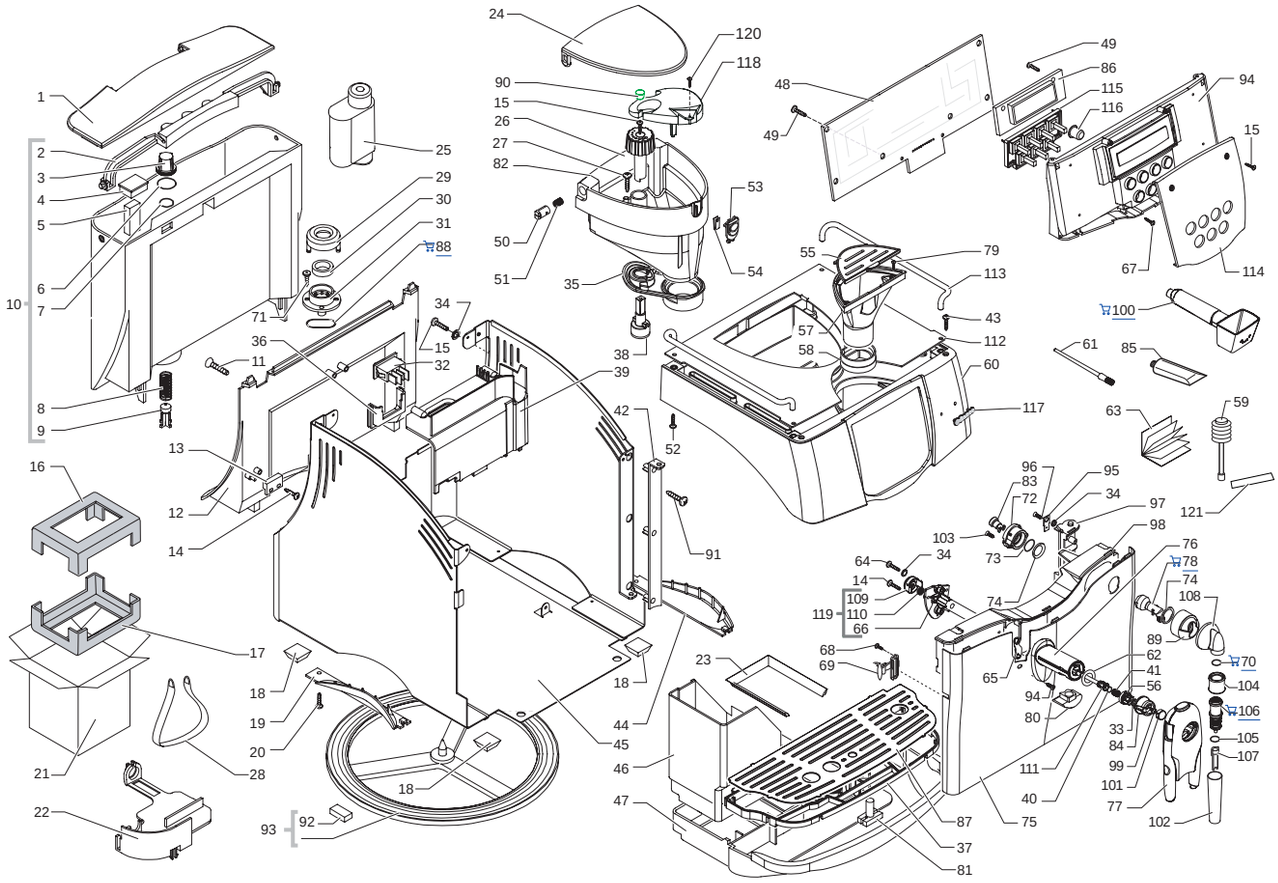

Saeco INTERNATIONAL GROUP **SUP021YBDR** CE **Cod.740825-26-10000112-2292**

POS	CODE	DESCRIPTION	NOTE
61	127390100	BRUSH FOR CLEANING	
62	148380800	MYLAR WASHER DE=19 DI=12 SP=0,2	
63	165897300	INSTRU.MANUAL SAECO TYPE SUP021YBDR	
	165897327	INSTRU.MANUAL SAECO TYPE SUP021YBDR	
64	129571121	SCREW TCB PH/SW 3X14 UNI 8112 INOX	
65	127535820	PLATE FOR DOOR METALLIC SMART	
66	11002322	COFF. DISPENSER TUBE FOR ADJUST.SHAFT	
		FROM S/N 9006SA40349625	
67	129660902	SCREW PANELVIT TCB 3,5X12 D.7505 ZNP	
68	129670302	PANE.TCB SCREW 2,9X9,5 TES.D=7,5 ZN	
69	146313740	DISENGA. LEVER GREY/SILVER DOOR SMART	
🛒 70	140324461	OR METRIC 0060-20 IN TERMOIL	
71	129535721	SCREW TSP3,5X9,5 DIN 7982 SS	
72	149200450	SUPPORT FOR ARTICULATED JOINT	
73	140329162	OR 117 IN SILICONE 70 SH	
74	148620900	SEMISPHERE SEAL FOR ARTICULAT.JOINT	
75	11001009	GLOSS/SILVER DOOR METALLIC SMART	
	228982950	DOOR METALL SMART BLACK	
76	229184704	COFFEE DISPENSER SUPPORT WITH HOLE	
77	223701026	SILVER/A13 COFFEE DISPENSER AS.SMART	
	223701050	BLACK COFFEE DISPENSER AS.SMART	
🛒 78	147922249	CONNECTOR FOR ARTICULATED JOINT	
79	129533202	SCREW TSPTORX T10 3,5X9,5 D7982 NI	
80	145854962	SEAL FOR COFFEE DISPENSER V2 SMART	
81	145501211	RED FLOAT FOR DRIP TRAY SMART	
82	142714400	BEAN CONTAIN.NATURAL/GREY SMART DIG	
83	145896949	RETAINING INSERT TEFLON TUBE	
84	227701104	CREAM ADJUSTM.KNOB GLOSS CHR.PLATED	
85	11005044	SAECO KLUBER TRIBOSTAR SIL 2 TUBE 5GR.	
86	192200300	20x2 LCD WHITE DISPLAY FSTN	
87	125743421	STAINLESS STEEL GRATE SMART	
🛒 88	140320461	OR METRICO 0080-20 IN TERMOIL	
89	228660204	CONNECTOR FOR STEAM TUBE	
90	149213000	TRANSP.CAP FOR KNOBS BEAN CONTAINER	
91	129740202	SCREW TSP PH/TT 4X10 UNI 8113 ZNP	WITH DOOR HINGE V2
		UP TO S/N 9005SA40022836	
	129511903	SCREW TCB 2,9X6,4 DIN 7981 BZ NICK	WITH DOO.HIN.V3+KIT
		FROM S/N 9005SA40022837	
92	9991.096	SQUARE ADHESIVE FOOT 8X15X3,2	
93	220380259	ROTATING RING SMART WITH 3 FEET	WITH PART. N°92
94	229171626	SUPPORT ELEC.CARD AS.021YBDR SILVER	

POS	CODE	DESCRIPTION	NOTE
94	229171650	SUPPORT ELECT.CARD AS.021YBDR BLACK	
95	186400903	FLAT TABS 6,3 0210380440	
96	129562603	SCREW TSC PZ-B 2,9X9,5 UNI 6956 NI	
97	229183526	SUP.HINGE DOOR METAL.SMART SILV.A13	
	229183550	SUPPOR.HINGE DOOR METAL.SMART BLACK	
98	229183126	SUPPORT DOOR METAL.SMART SILVER A13	
	229183150	SUPPORT DOOR METALLIC SMART BLACK	
99	129512503	SCREW TCB 2,9X9,5 DIN 7981 NICK	
🛒 100	146680850	BLACK COFFEE MEASURE SMART	
101	229200250	BLACK CAP FOR KNOB CREAM ADJUSTMENT	
102	122842121	EXTERNAL COVER ST.STEEL PANNAR.G100	
103	129571521	SCREW TCB PH/SW 3X18 UNI 8112 INOX	
104	147757050	STEAM TUBE PROTECTION	
105	140320762	OR 108 IN SILICONE	
🛒 106	222270249	UPPER TUBE ASS.FOR PANNARELLO	
107	4301018000	LOWER INTERNAL PIPE	
108	228660304	CONNECTOR FOR STEAM TUBE	
109	149213450	CAP FOR COFFEE DISPENSER TUBE	
		FROM S/N 9006SA40349625	
110	11002323	CONIC SEAL FOR COFFEE DISPENSER TUBE	
		FROM S/N 9006SA40349625	
111	140640200	CREAM ADJUSTMENT SHAFT	
112	222802340	CUP WARMING LID SMART STAINSTEEL-SB	
113	227751808	CUPS PROTECTION SMART/DIG.CHROMED	
114	224890626	SILVER A13 FRONT.PANEL SMART DELUXE AS.	
	224890650	BLACK FRONT.PANEL SMART DELUXE ASSY.	
115	149253100	TOUCH PANEL 4+3 BUTTONS SMART DIGIT	
116	229141008	BUTTON SMART DELUXE CHROMIUM PLATED	
117	127573900	PLATE WITH LOGO SAECO SMART DIAMOND	
118	147757800	BEAN CONT. PROTECT. SMART NATUR/GREY	
119	20000960	SPARES KIT FOR COF. DISPENSER TUBE NEW	
		UP TO S/N 9006SA40349624	
120	U109.006	SCREW AUT.TCB 2,2X9,5 DIN 7981 C NIK	
121	0301.961	STICKER FOR WATER HARDNESS TEST	

Щоб переглянути та придбати необхідну запчастину, натисніть на її номер на малюнку, або на її номер, назву у таблиці з позначкою 🛒

Exp. E74082 Rev.08

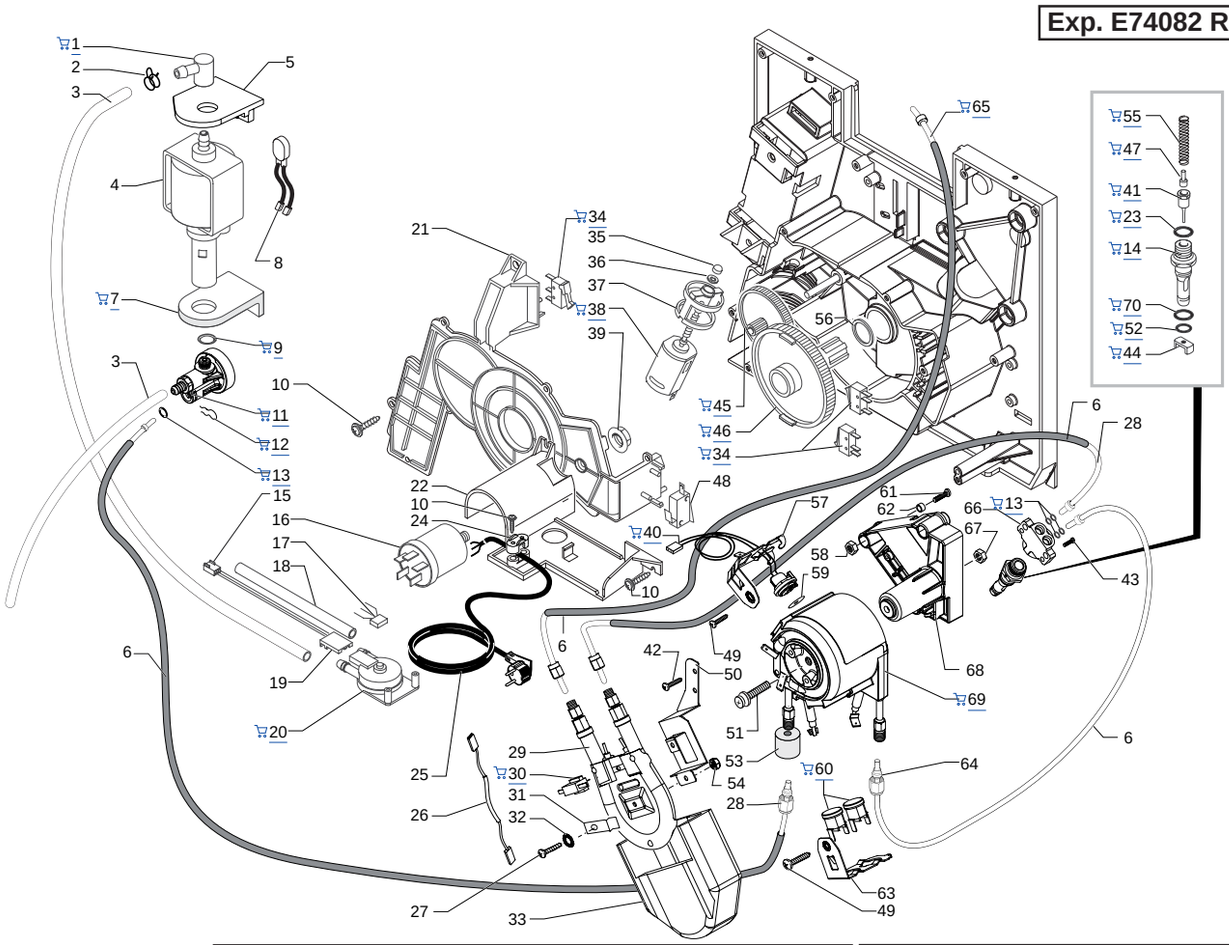

Saeco INTERNATIONAL GROUP **SUP021YBDR**

INOX BOILER
TEFLON TUBE

CE **Cod.740825-26-10000112-2292**

POS	CODE	DESCRIPTION	NOTE
01	147920150	90° CONNECTOR PUMP INLET	
02	184320200	SPRING HOSE CLAMP D=9,5MM	
03	149360200	SILICONE TUBE 5X8 70SR	IN ROLL
04	12000140	ULKA PUMP EP5/S GW	230V-50HZ
	12000182	ULKA PUMP EP5/S GW	220V-60HZ
	12000131	POMPA ULKA EP5/S	120V-60HZ
05	149205710	PUMP SUPPORT HOLE 13,2 RED	
06	149361200	BLACK SILICON TUBE 7,5X9,3	IN ROLL
07	149185850	EATON PUMP SUPPORT MAGIC 4002012	
08	0311.807	YELLOW HARNESS KLIXON JP 13	230V
	289201000	AS.TERMPR.TERMICO 120°C CAV.125/365	120V
09	NM02.028	OR 2015 EPDM FDA	
10	129914002	SCREW TCB TORX 10 3,5X16 PLAST.ZN-B	
11	229452100	COMPENSATION AND SAFETY VALVE ASSY	
12	9011.144	FORK FOR TUBE D.4	
13	140328059	OR 2015 IN SILICONE PTFE/FDA	
14	9011.100	PEG FOR VALVE IN PLASTIC	
15	283551300	3POLE CONNECT.AS.TURBINE JP18 SMART	
16	184651100	ANTIDISTURB FILTER 0,47X2+1000Y2+0,5L	230V
	184651500	FILTRO ANTIDIST.16A F.NC.16.10.474.472.A	120V
17		PARTICULAR NOT AVAILABLE	SEE PART. N°20
18	JS01.022	SILICONE TUBE 5X10 60 SHORE	IN ROLL
19	9161.018	FORK FOR WATERWHEEL	
20	286473300	-M-VDE TURBINE WITH SENSOR KIT	WITH PART N°17
21	9161.331.920	RATIOMOTOR COVER TRANSPARENT	
22	149194800	TURBINE SUPPORT SMART	
	11009371	NATURAL TURBINE SUPPORT SMART UL	
23	140320459	OR METRICO 0080-20 SILICON.PTFE/FDA	
24	148600600	CABLE CLAMP V0 MAGIC ESP COMBI UL	
25	183911550	POWER CABLE SCHUKO BLACK L=1500	
	183930850	BLACK POWER CABLE CH H05+3FAST.L=1500	
	183940950	BLACK POWER CABLE AUST.H05+3FAS.L=1500	
	11001845	BLACK POWER CABLE KOREA 3X1,25 L=1600	
	183922450	CAVO AL.USA SJT 3C 16AWG NERO L=1500	
26	183440800	CABLE 1 WIRE SILIC.BLACK THERM/FUSE 229°	
27	129823802	TCB SCREW M4X8 UNI 7687 ZNP	
28	227874900	CONNECTOR AS.TEFLON 2X4 L=250 MM	
29	288140458	HEATING-ELEMENT BLECKMAN ASSY.	230V-1000W
	288140455	AS.RESIS.BLECKMAN 30176 FILET.	120V-1000W
30	189428300	THERMOSTAT 175° INTERCONTR.161471002	
31	127535319	THERMAL FUSE FIXING PLATE	
32	128310404	WASHER UNI 8842 A4 BURNISHED	
33	147755900	HEAT.ELEM. PROTECTION BLECKM. SMART	
34	NE05.038	MICROSWITCH	
35	9121.046	SINTERED BUSH FOR MOTOR	
36	148380200	WASHER BAKELIZZATE D=5,5	
37	9121.044	ANTIVIBRATION FOR MOTOR	

POS	CODE	DESCRIPTION	NOTE
38	11003037	MOTOR FOR RATIOMOTOR ASSY.	
39	123453602	FLANGE NUT M8 TOOTHED BASE GALV.	
40	288582300	SENSOR ELECT.BOARD WITH CONNECTOR	
41	11009019	TEA/BRASS PISTON L=20,9 ASSY.	
42	129573402	SCREW TAPT M4X10 DIN 7985 GALV	
43	129910103	HI -LO TC SCREW 3,5X15 RIF.910189	
44	9011.099	CURSOR FOR BOILER VALVE IN PLASTIC	
45	9121.042	GEAR Z.12/90	
46	9121.069.150	GEAR Z.108 FOR MOUNTING PLATE M4000	
47	11009013	TEA/BRASS PIN FOR PISTON L=10	
48	186723800	MICROSWITCH SAIA X3M502K2KAM92AS	
49	129573202	SCREW TCB PH/TT 4X8 UNI 8112 ZNP	
50	129025002	BRACKET BOILER SMART SUPPORT	
51	129932202	ROUND HEAD SCREW 10.9 M5X20 GALV	
52	NM01.057	OR ORM 0050-20 SILICONE	
53	147756562	PROTECTION FOR FOLK SPRING TUBE D=4	
54	U302.003	NUT HEXAGONAL M4 UNI 5588	
55	9011.132	SPRING FOR PIN	
56	9161.132	MYLAR WASHER FOR RATIOMOTOR	
57	126838217	SENSOR FIXING SPRING	
58	U310.003	NUT SELF LOCK.M5 UNI 7473	
		UP TO S/N 9005SA40230571	
59	145951600	ELECTRIC INSULATING DISK D=16	
60	189428200	THERMOSTAT 175° 1NT-08L-3794	230V
	189428600	TERMOSTATO 175° 1NT-08L-5125	120V
61	U044.020	SREW TSP M5,0X30 UNI 7688 GALV.	
		UP TO S/N 9005SA40230571	
	129932502	SELF DRILLING SCREW 5X30 GALVANIZED	
		FROM S/N 9005SA40230572	
62	9161.206	INSULATING SPACER FOR BOILER	
63	126838117	2 THERMOSTATS FIXING SPRING	
64	227876800	CONNECTOR AS.TEFLON 2X4 L=235 MM	
65	227875400	CONNECTOR AS.TEFLON 2X4 L=330 MM	
66	227900303	BRASS/NIK.CONNEC.FOR BOILER SUPPORT	
67	123453902	SELF-LOCKI.NUT M5X0,8 DIN 980 CLA.8	
68	20000204	SPARES KIT SUPPORT BOILER SMART	
		UP TO S/N 9005SA40230571	
	149197700	SUPPORT FOR ALLUMINIUM BOILER SMART	
		FROM S/N 9005SA40230572	
69	282058858	ALUM.BOILER AS.WITH RESISTANCE	230V-1100W
	282058855	AS.CALD.TUBOL/V2 C/RES.SUPPL.	120V-1100W
70	NM01.035	OR ORM 0090-20 SILICONE	
	282135558	ALUM.BOILER 230V AS.WITH RESISTANCE	COMPLETE
	282135555	AS.GEN.CALD.AL.TUB.SMART/SIRIUS C/R.120V	COMPLETE
		WITH PART. N°13-14-23-28-40-41-43-44-47-49	
		51-52-53-55-57-58-59-60-63-64-66-67-68-69-70	

Щоб переглянути та придбати необхідну запчастину, натисніть на її номер на малюнку, або на її номер, назву у таблиці з позначкою 🛒

Exp. E74082 Rev.08

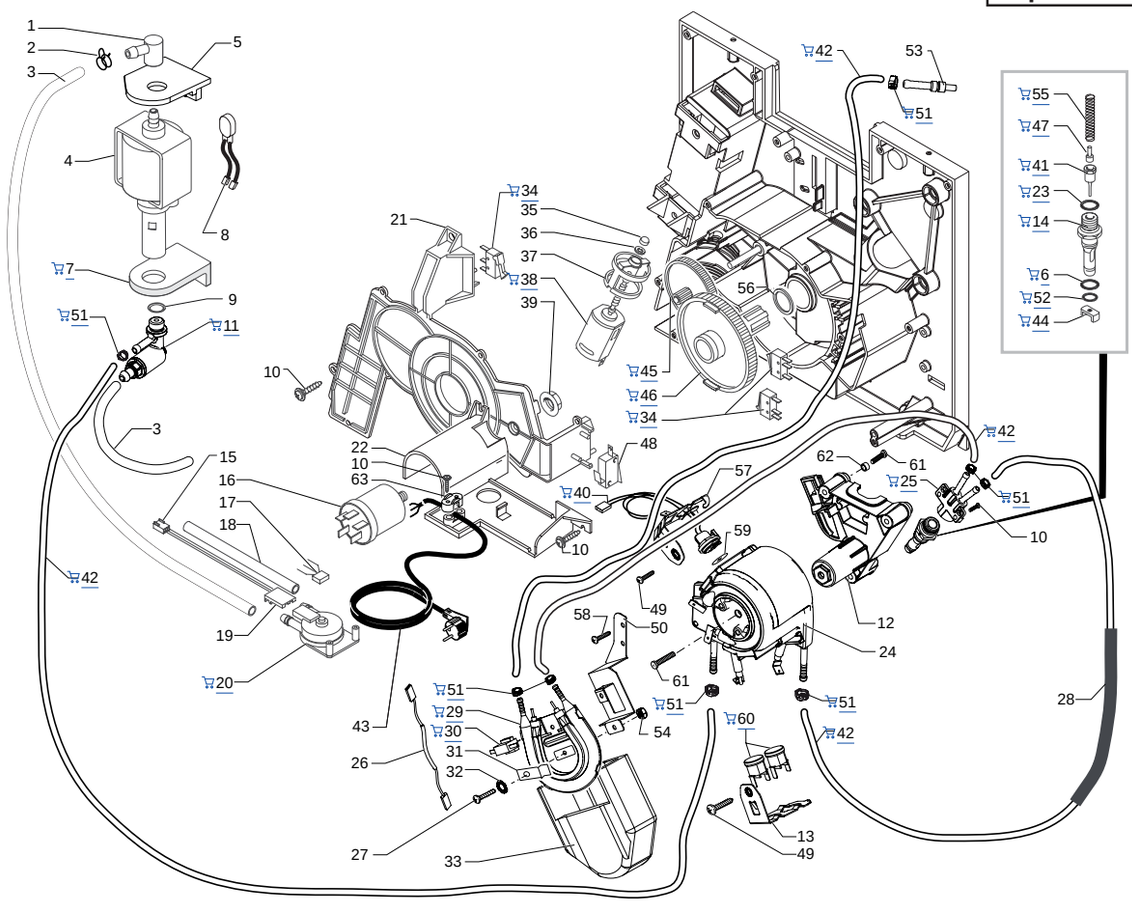

Saeco INTERNATIONAL GROUP — **SUP021YBDR**

INOX BOILER
REINFORCE
SILICONE TUBE

CE

Cod.740825-26-10000112-2292

POS	CODE	DESCRIPTION	NOTE
01	147920150	90° INLET CONNECTOR PUMP	
02	184320200	SPRING HOSE CLAMP D=9,5MM	
03	149360200	SILICONE TUBE 5X8 70SR	IN ROLL
04	12000140	ULKA PUMP EP5/S GW	230V-50HZ
05	149205710	PUMP SUPPORT HOLE 13,2 RED	
06	NM01.035	OR ORM 0090-20 SILICONE	
07	149185850	EATON PUMP SUPPORT MAGIC 4002012	
08	0311.807	YELLOW HARNESS KLIXON JP 13	230V
09	140321961	OR 2031 IN TERMOIL	
10	129914002	SCREW TCB TORX 10 3,5X16 PLAST.ZN-B	
11	11010166	SAFETY VALVE 16-18 BAR V2 P0049 ASSY.	
12	11004209	SUPPORT FOR ALLUMINIUM BOILER SMART	
13	126838117	2 THERMOSTATS FIXING SPRING	
14	9011.100	PEG FOR VALVE IN PLASTIC	
15	283551300	3POLE CONNECT.AS.TURBINE JP18 SMART	
16	184651100	ANTIDISTURB FILTER 0,47X2+1000Y2+0,5L	
17		PARTICULAR NOT AVAILABLE	SEE PART.N°20
18	JS01.022	SILICONE TUBE 5X10 60 SHORE	IN ROLL
19	9161.018	BRACKET FOR TURBINE	
20	286473300	-M-VDE TURBINE WITH SENSOR KIT	WITH PART.N°17
21	9161.331.920	TRANSPARENT RATIOMOTOR COVER	
22	149194800	NATURAL TURBINE SUPPORT SMART	
23	140320459	OR ORM 0080-20 IN SILICONE PTFE/FDA	
24	11004667	V5 TUB.BOILER W/ADDIT.RESIST.	230V-1100W
25	11002606	BOILER SUPPORT CONNECTOR	
26	183440800	CABLE 1 WIRE SILIC.BLACK THERM/FUSE 229°	
27	129823802	TCB SCREW M4X8 UNI 7687 ZNP	
28	11010624	TRANSP.SILICONE TUBE 10,5X12,3 L=200 MM	
29	11004550	BLECKMAN RESISTANCE SMART ASSY.	230V
30	189428300	THERMOSTAT 175° INTERCONTR.161471002	
31	127535319	GALV/STEEL THERMAL FUSE FIXING PLATE	
32	128310404	WASHER UNI 8842 A4 BURNISHED	
33	147755900	HEAT.ELEMENT PROTECTION BLECKMANN SMART	
34	NE05.038	MICROSWITCH	
35	9121.046	SINTERED BUSH FOR MOTOR	
36	148380200	WASHER BAKELIZZATE D=5,5	
37	9121.044	ANTIVIBRATION FOR MOTOR	
38	11003037	MOTOR FOR RATIOMOTOR ASSY.	
39	123453602	FLANGE NUT M8 TOOTHED BASE GALV.	
40	288582300	SENSOR ELECT.BOARD WITH CONNECTOR ASSY.	230V
41	11009019	TEA/BRASS PISTON L=20,9 ASSY.	

POS	CODE	DESCRIPTION	NOTE
42	16000380	5X8,9 SILICONE TUBE	IN ROLL
43	183911550	POWER CABLE SCHUKO BLACK L=1500	
	183930850	BLACK POWER CABLE CH H05+3FAST.L=1500MM	
44	9011.099	M CURSOR FOR BOILER VALVE IN PLASTIC	
45	9121.042	GEAR Z.12/90	
46	9121.069.150	GEAR Z=108 FOR MOUNTING PLATE M4000	
47	11009013	TEA/BRASS PIN FOR PISTON L=10	
48	186723800	MICROSWITCH SAIA X3M502K2KAM92AS	
49	129573202	SCREW TCB TORX 20 M4X8 AUTOFORMING ZN-B	
50	129025002	BRACKET BOILER SMART SUPPORT	
51	12000892	OETIKER CLAMP D=9,5 16700004	
52	NM01.057	OR ORM 0050-20 SILICONE	
53	11000750	TEA/BRASS CONNECTOR FOR SILICONE TUBE	
54	U302.003	NUT HEXAGONAL M4 UNI 5588	
55	9011.132	SPRING FOR PIN	
56	9161.132	MYLAR WASHER FOR RATIOMOTOR	
57	126838217	SENSOR FIXING SPRING	
58	129573402	SCREW TAPT M4X10 DIN 7985 GALV	
59	145951600	ELECTRIC INSULATING DISK D=16	
60	189428200	THERMOSTAT 175° 1NT-08L-3794	
61	129932502	SCREW TCEI 5X30 PLAST.ZN-B	
62	9161.206	INSULATING SPACER FOR BOILER	
63	148600600	CABLE CLAMP V0 MAGIC ESP COMBI UL	
	11010353	BOILER SMART/RS V3 230V ASSY.	COMPLETE

Щоб переглянути та придбати необхідну запчастину, натисніть на її номер на малюнку, або на її номер, назву у таблиці з позначкою 🛒

Exp. E74082 Rev.08

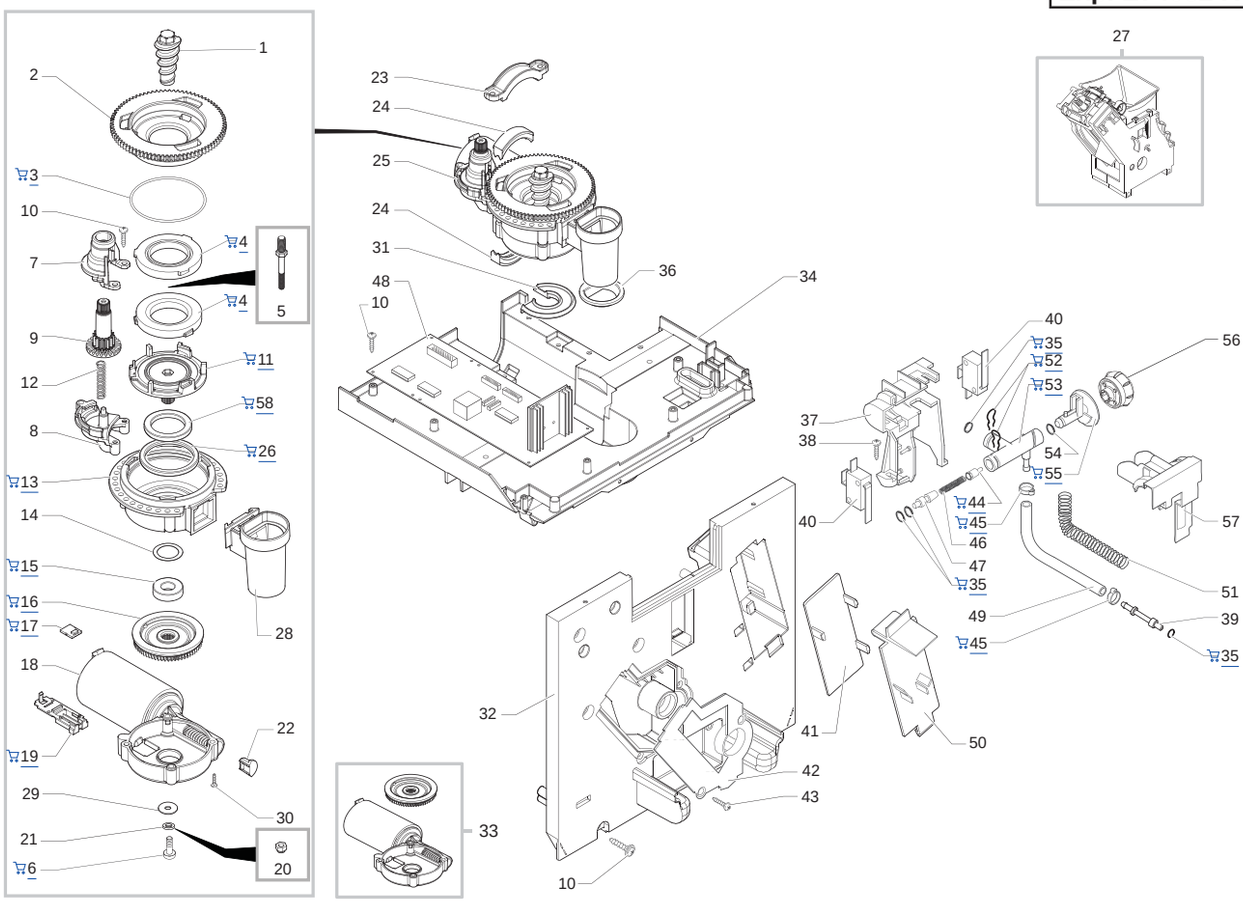

Saeco INTERNATIONAL GROUP **SUP021YBDR** CE **Cod.740825-26-10000112-2292**

POS	CODE	DESCRIPTION	NOTE
01	9141.001	BRASS NCREMENT SCREW MC	
		UP TO S/N.9008SA40290194	
	11011205	TEA/ZAMA INCREASE SCREW GRINDER	
		FROM S/N.9008SA40290195	
02	149198250	UPPER GRINDER SUPPORT COFFEEGRINDER	
03	140328960	NBR FDA OR METRIC 0530-15	
04	146520100	BAKED CLAY KLAGER GRINDER 48X28	
05	127473603	STEEL PIN M4-M6 FOR INCREMENT SCREW	
		UP TO S/N.9008SA40290194	
06	129574802	SCREW TCB TORX 20 M4X30 ZN-B	
		FROM S/N.9008SA40290195	
07	149199750	UPPER GEAR SUPP. COFFEEGRINDER SMART	
08	149199850	LOWER GEAR SUP. COFFEEGRINDER SMART	
09	146002150	COFFEE GRINDIN. ADJUSTMENT GEAR SMART	
10	129914002	SCREW TCB TORX 10 3,5X16 PLAST.ZN-B	
11	149198350	LOWER GRINDER SUPPORT COFFEEGRINDER	
12	126772918	SPRING FOR ADJUSTMENT GRINDING GEAR	
13	142905450	UPPER BODY WITH COFFE.GROUND OUTLET	
14	128381800	CRINKLE WASHER 21,8X15,8X0,2	
15	123030200	RADIAL BEARING 61900.2RS1	
16		PARTICULAR NOT AVAILABLE	SEE PART. N°33
		UP TO S/N 9005SA40362331	
	226000300	GEAR SX Z=38 ASS.FOR GRINDER MOTION	
		FROM S/N 9005SA40362332	
17	20000230	KIT SPARES FOR SENSOR MC/V3 SMART	
		UP TO S/N 9005SA90357734	
	181540900	ELECTRONIC BOARD WITH SENSOR HAL506	
		FROM S/N 9005SA90357735	
18		PARTICULAR NOT AVAILABLE	SEE PART. N°33
		UP TO S/N 9005SA40362331	
	11004354	MOTOR COFFEEGRINDER/V3.1 IME ASSY.	230V
		FROM S/N 9005SA40362332	
	11004409	MOTOR COFFEEGRINDER/V3.1 IME ASSY.	120V
19	149199050	SENSOR SUPPORT FOR COFF.GRIND.MOTOR	
20	123453102	SELF LOCK NUT M4 DIN 982 HIGH GALV.	
		UP TO S/N.9008SA40290194	
21	128310402	GALV.WASHER UNI 8842 A4	
		FROM S/N.9008SA40290195	
22	149214800	CAP FOR WORM SCREW MC/V3 CENTRING	
23	144752300	DEADLOCK MOTOR FLANGE SMART1	
24	145854562	COFFEGRIND.MOTOR SUPP. SEAL SMART1	
25	11000516	GENERAL MOTOR ASS.MC/V3.1	230V
	11000514	GENERAL MOTOR ASS.MC/V3.1 120V	120V
26	140360500	FELT RING 45,4X39,4X4	

POS	CODE	DESCRIPTION	NOTE
27	11003426	BLACK BREW UNIT V3 NEW/SBS SMART	
		(SEE COD. EXP. E90046)	
		NOTE:FOR SINGLE PARTS OF OLD GREY	
		BREW UNIT:	
		SEE ESP.CODE E90041	
28	11012564	GROUND COFFEE OUTLET CONVEYOR V2 ASSY.	
29	128381902	FLAT WASH.DI=4,3 DE=14 SP=1,5 GALV.	
30	129661702	PANELVIT TCB SCREW 3,5X25 D.7505 ZN	
31	145854662	COFEGRIND.MOTOR ANTIVIBR.SEAL SMART	
32	227533000	ASSEMBLY BOILER SUPPORT PLATE SMART	230V
	11009360	BOILER SUPPORT PLATE SMART UL ASSY.	120V
	11023172	MOUNTING PLATE WITH PIN V2 NESPR.UL ASSY	KOREA
33	20000202	SPARES KIT MOTOR COFFEEGRIND./V3 230V	WITH PART. N°16 - 18
		UP TO S/N 9005SA40362331	
34	11006440	BLACK GRINDER SUPPORT PLATE V3 SMART1	230V
	11000467	BLACK GRINDER SUPP. PLATE V3 SMART1 UL	120V
35	140328059	OR 2015 IN SILICONE PTFE/FDA	
36	145854462	GROUND COFFEE CONT.SEAL LOWER SMART1	
37	11005343	BLACK FAUCET SUPPORT V2 SMART	
38	12000450	SCREW TCBR TORX 10 3,5X12 PLAST.ZN-N	
39	227961303	STRAIGHT CONNECTOR	
40	186724200	MICROSWITCH SAIA X3M502K2KAJ32AV	
41	9161.345.050	INT.COVERING BLACK PUMP SPACE	
42	9161.333.050	BOILER BLACK COVER	
	11009327	BLACK BOILER COVER SMART UL	
43	129535721	SCREW TSP3,5X9,5 DIN 7982 SS	
44	11009018	TEA/BRASS PISTON L=15,1 ASSY.	
45	NF11.052	OETIKER CLIP	
46	126765317	STEEL SPRING BOIL. PISTON MAG.9011	
47	11009007	TEA/BRASS CAP FOR FAUCET NESPRESSO	
48	11002814	ELECTR.BOARD POWER SUP021YBDR/V1	230V
	11007641	POWER BOARD P120/V1 DL	120V
49	JS01.019	SILIC. TUBE FABRIC FINISH 3X7	IN ROLL
50	9161.332.050	EXT.COVERING BLACK PUMP SPACE	
51	126772018	SPRING DI=7,5 FOR FABRIC FINISH TUB	
52	9011.144	FORK FOR TUBE D.4	
53	11003733	NIKELED STEAM FAUCET	
54	140328561	OR D=4,18 X 1,90 IN TERMOIL	
55	140640300	FAUCET SHAFT FOR SMART	
56	227710904	STEAM KNOB ZAMAS CHROM.PLATED SMART	
57	147756400	PROTECTION FAUCET BODY WATER/STEAM	
58	123030300	AXIAL BEARING EKKO 342.35252	