Щоб переглянути та придбати необхідну запчастину, натисніть на її номер на малюнку, або на її номер, назву у таблиці з позначкою 🛒

Esp. E74106 Rev.06

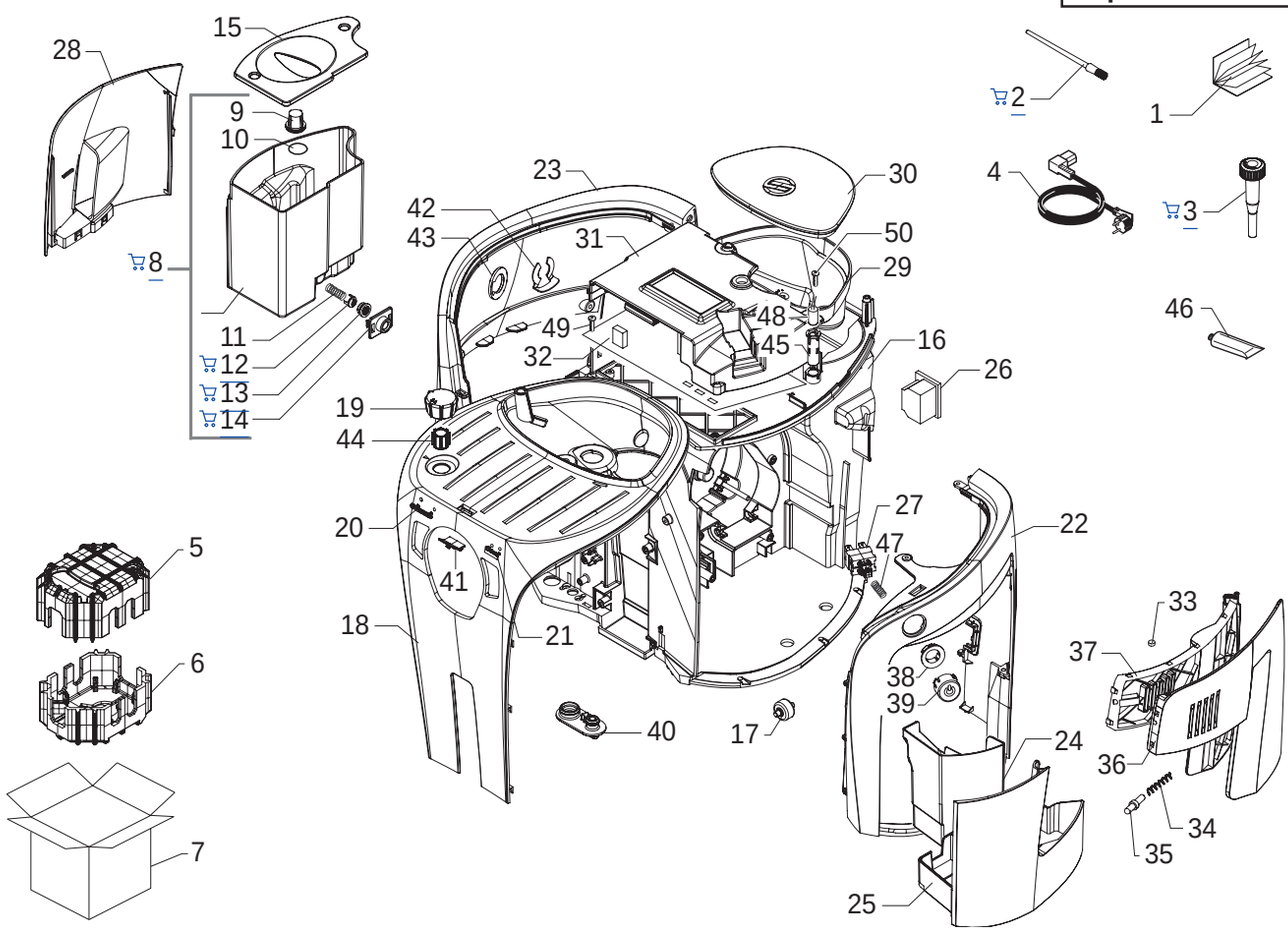

Saeco INTERNATIONAL GROUP

SUP031OR

Cod. 10000206-49-60-61-1340-41-1602-03
10001604-05-06-07-08-09-1770-1855-2520

POS	CODE	DESCRIPTION	NOTE
01	15001426	MANUAL V2 SAE P0049/B SUP031OR GB/F	
	15001427	MANUAL V2 SAE P0049/B SUP031OR E/P	
	15001428	MANUAL V2 SAE P0049/B SUP031OR D/I	
	15001429	MANUAL V2 SAE P0049/B SUP031OR NL/P	
	15001654	MANUAL INSTRUCTIONS SUP031OR CHN	
02	127390100	BRUSH FOR CLEANING	
03	11003785	BLACK GRINDER ADJUSTMENT KEY P0049	
04	183911050	POWER CABLE SCHUKO BLACK L=1200	
	183930650	PO.CABL.CH BLACK 3X1 H05VV-F L=1200	
	183921950	POWER CABLE SJT3 USA BLACK UL L=1200	
	183940650	BLACK POWER CABL. AUST.3X1 H05VVF L=1200	
	183980650	POWER CABL.JAPPON VCTF BLACK L=1200	
	11001985	BLACK POWER CABLE KOREA 3X1,25 L=1200	
	11004245	BLACK POWER CABLE BRAZ. W/CONECT.L=1200	
	11004246	BLACK POWER CABLE TAIWAN HVCTF L=1200	
	11004247	BLACK POWER CABLE RVV 3X1 CHINA L=1200	
05	13000123	UPPER TECHMATE INSERT FOR BOX P0049	
06	13000122	LOWER TECHMATE INSERT FOR BOX P0049	
07	13000124	DISPLAY BOX SAECO P0049	
08	11001746	TRANSPARENT WATER CONTAINER P0049 ASS.	
09	224640200	EXTERNAL FILTER FOR WATER CONTAINER AS.	WITH PART. N°10
10	140328461	EPDM OR METRIC 0190-10	
11	11003672	SPRING FOR WATER CONTAINER VALVE P0049	
12	11003673	GREY WATER CONTAINER VALVE INSERT P0049	
13	11003671	TRANSP.VALVE FOR WATER CONTAINER P0049	
14	11001298	BLACK LID FOR DUCKBILL VALVE P0049	
15	11001308	NATURAL/GREY WATER CONTAINER LID P0049	
16	11004687	MOUNTING PLATE WITH PIN P0049 ASSY.	
	11009302	MOUNTING PLATE WITH PIN P0049 UL ASSY.	
	11006507	MOUNTING PLATE WITH PIN P0049 PP+T ASSY.	
17	11000223	BLACK WHEEL FOR CASING BOTTOM P124	
18	11004381	SILVER COVER P0049	
19	11004372	SILVER WATER-STEAM KNOB P0049 W/O.N/S/SC	
20	11004142	SILVER PLATE LOGO SAECO NEW P0049/P0053	
21	11004908	BLACK PLATE WITH LOGO ODEA P0049 GIRO	
	11004909	BLACK PLATE W/LOGO ODEA P0049 GIRO PLUS	
22	11004575	CARBONA RIGHT SIDE CASING P0049	
	11004389	TITANIO RIGHT SIDE CASING P0049	
	11004411	MATTONE RIGHT SIDE CASING P0049	
	11007103	BROWN RIGHT SIDE CASING P0049	
23	11004576	CARBONA LEFT SIDE CASING P0049	
	11004390	TITANIO LEFT SIDE CASING P0049	
	11004412	MATTONE LEFT SIDE CASING P0049	
	11007104	BROWN LEFT SIDE CASING P0049	
24	11003533	BLACK DUMP BOX P0049 W/OUT S.CREEN ASSY.	

POS	CODE	DESCRIPTION	NOTE
25	11004579	CARBONA DRIP TRAY COFFEE UNIT P0049	
	11004414	MATTONE DRIP TRAY COFFEE UNIT P0049	
	11004392	TITANIO DRIP TRAY COFFEE UNIT P0049	
	11007105	BROWN DRIP TRAY COFFEE UNIT P0049	
26	12000280	CUP SOCKET EN 60320 C 13	
27	11000592	SAIA 3292 GENERAL SWITCH FOR P124	
28	11004591	CARBONA WATER TANK OUTLET COVER P0049	
	11004393	TITANIO WATER TANK OUTLET COVER P0049	
	11004415	MATTONE WATER TANK OUTLET COVER P0049	
	11007106	MARRON WATER TANK OUTLET COVER P0049	
29	11001293	NATURAL/GREY BEAN CONTAINER P0049	
30	11001762	TRANSPAR.BEAN COFF.CONTAIN.LID ASS.P0049	
	11009071	NAT/GREY BEAN COF.CONT.LID P0049 S/S.ASS	
31	11009191	BLACK POWER BOARD PROTECTION V2 P0049	
32	11001360	PWR BOARD P0049/P0053	230V
	11003968	PWR BOARD P0049/P0053	120V
33	9161.111	MAGNET FOR FLOAT SUPERAUTOM.	
34	11008956	SS SPRING FOR LOCK DOOR G0053	
35	11001340	BLACK DOOR PIN P0049	
36	11004578	CARBONA DOOR P0049	
	11004391	TITANIO DOOR P0049	
	11004413	MATTONE DOOR P0049	
	11007108	BROWN DOOR P0049	
37	11001091	BLACK INSIDE COVER DOOR P0049	
	11009283	BLACK INSIDE COVER DOOR P0049 UL	
38	11004592	CARBONA ON-OFF BUTTON INSERT P0049	
	11004055	TITANIO ON-OFF BUTTON INSERT P0049	
	11004540	MATTONE ON-OFF BUTTON INSERT P0049	
	11007107	MARRON ON-OFF BUTTON INSERT P0049	
39	11004377	SILVER ON-OFF SWITCH BUTTON P0049	
40	11001437	BLACK CAP FOR CONNECTIONS P0049/P0053	
41	11001339	TRANSPLATE INFRAREDS PLATE P0049	
42	NF11.084	FOLK SPRING	
43	11001624	STEAM TUBE WASHER P0049	
44	11005287	BLACK BUSH FOR STEAM KNOB	
45	11003154	BLACK REED SENSOR SUPPORT P0049	
46	11005044	SAECO KLUBER TRIBOSTAR SIL 2 TUBE 5GR.	
47	11005040	SPRING FOR ON-OFF BUTTON P0049	
48	11003889	2POLES CONNECT. SENSOR REED DOOR P0049	
49	129913202	SCREW TCB TORX 10 3X8 PLAST.ZN-B	
50	129661702	SCREW TCB TORX 3,5X30 PLAST.ZN-B	

Щоб переглянути та придбати необхідну запчастину, натисніть на її номер на малюнку, або на її номер, назву у таблиці з позначкою 🛒

Esp. E74106 Rev.06

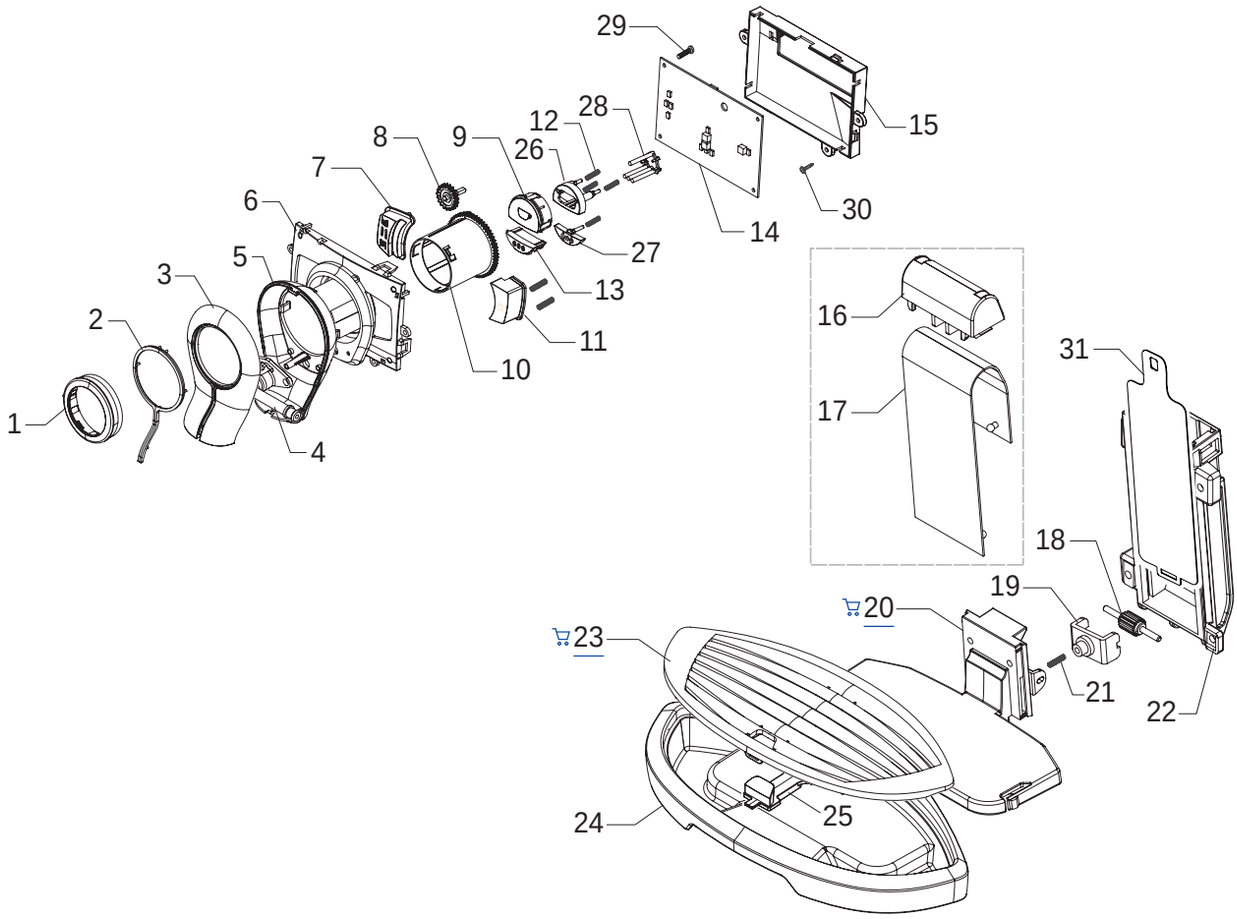

Saeco INTERNATIONAL GROUP

SUP031OR

Cod. 10000206-49-60-61-1340-41-1602-03
10001604-05-06-07-08-09-1770-1855-2520

POS	CODE	DESCRIPTION	NOTE
01	11004387	SILVER HEIGHT REGULATION NUT P0049	
02	11001788	AMBRA COFFEE DISPENSER LENS P0049	
03	11004385	SILVER FRONT COF.DISPENSER COVER P0049	
04	11001772	TRANS.INNER CASING COFF.DISPENSER P0049	
05	11004383	SILVER REAR COF.DISPENSER COVER P0049	
06	11004382	SILVER SUPPORT ELECTR.CARD P0049	
07	11001351	BLACK BUTTON FOR ALLARMS P0049	
08	11001320	BLACK GEAR Z=19 FOR P0049	
09	11001354	BLACK COFFEE BUTTON P0049/B	
10	11001314	BLACK SUPPORT FOR RING NUT P0049	
11	11001352	BLACK WATER BUTTON P0049	
12	11001363	SPRING FOR BUTTONS P0049	
13	11001355	BLACK COFFEE DOSE BUTTON P0049/B	
14	20000653	KIT SPARES CPU P0049 + FAUCET BOAR. 3SEN.	WITH PAR.N°21 TA.3
		UP TO S/N. 9006SA40294417	
	11004915	AS.CPU+SW V1 P0049	
		FR.S/N.9006SA40294418 UP TO S/N.9007SA40439137	
	11007344	AS.CPU+SW V2 P0049	
		FROM S/N. 9007SA40439138	
15	11001299	BLACK SUPPORT ELECTR.CARD CPU P0049.	
16	11001304	BLACK DRIP TRAY GUIDE LID P0049	
		UP TO S/N. 9008SA40110704	
17	11001438	SILVER DRIP TRAY SUPPORT PROTECT.P0049	
		UP TO S/N. 9008SA40110704	
18	11001758	PIN WITH BLACK INSERT ASSY.P0049	
19	11001335	BLACK PIN INSERT FOR DRIP TRAY P0049	
🛒 20	11001295	BLACK DRIP TRAY SUPPORT P0049	
21	11001364	MOVE DRIP TRAY SPRING P0049	
22	11001294	BLACK DRIP TRAY GUIDE P0049	
🛒 23	11004379	SILVER GRATE FOR DRIP TRAY P0049	
24	11009633	CARBONA DRIP TRAY P0049	
25	11004185	AMBRA FLOAT FOR DRIP TRAY P0049	
26	11001350	BLACK COFFEE BUTTON SPACER P0049/B	
27	11001309	BLACK SPACER FOR COF.DOSE BUTTON P0049	
28	11001291	TRANSPARENT CAP LED COVER P0049	
29	129913202	SCREW TCB TORX 10 3X8 PLAST.ZN-B	
30	12000450	SCREW TCBR TORX 10 3,5X12 PLAST.GALVANIZ	
31	11007037	SPECCHIATO DRIP TRAY PROTECTION V2 P0049	
		FROM S/N. 9008SA40110705	

POS	CODE	DESCRIPTION	NOTE

Щоб переглянути та придбати необхідну запчастину, натисніть на її номер на малюнку, або на її номер, назву у таблиці з позначкою 🛒

Esp. E74106 Rev.06

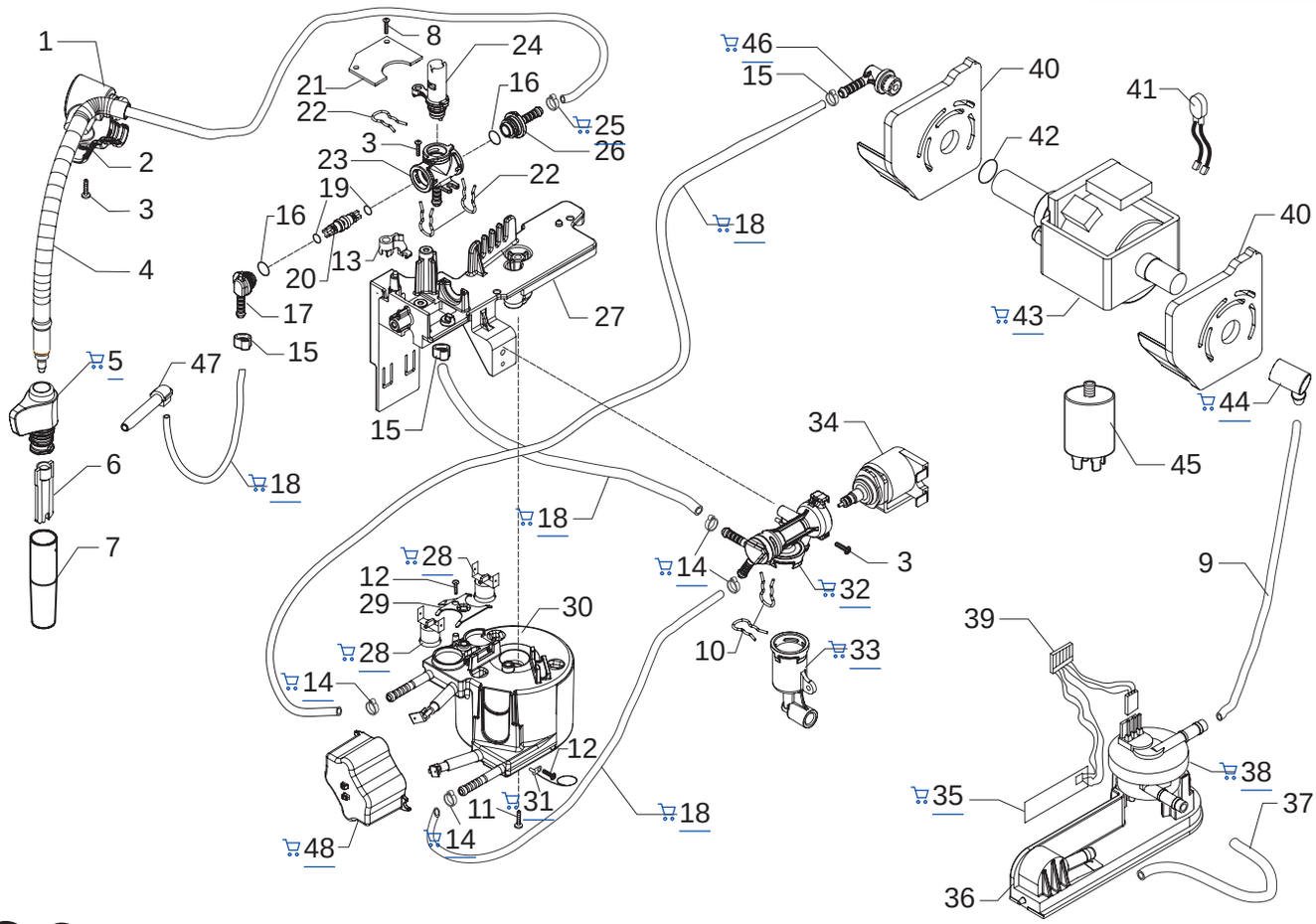

Saeco INTERNATIONAL GROUP

SUP031OR

Cod. 10000206-49-60-61-1340-41-1602-03
10001604-05-06-07-08-09-1770-1855-2520

POS	CODE	DESCRIPTION	NOTE
01	11004196	CHROMED UPPER STEAM TUBE COVER P0049	
02	11004197	CHROMED LOWER STEAM TUBE COVER P0049	
03	129912202	SCREW TCB TORX T10 3X12 UNI 9786 ZN	
04	11003122	ST.STEEL STEAM TUBE P0049 ASSY.	
05	11001625	STEAM TUBE HANDGRIP P0049	
06	11001769	BLACK COVER PANNARELLO P0049/A	
07	11001621	STAINLESS STEEL COVER PANNARELLO P0049	
08	129913202	SCREW TCB TORX 10 3X8 PLAST.ZN-B	
09	149360200	SILICONE TUBE 5X8 70SR IN ROLL	
10	11005096	FORK SPRING FOR VALVE P0049	
11	129932502	GALVANIZDE SELF DRILLING SCREW 5X30	
12	129573202	SCREW TCB PH/TT 4X8 UNI 8112 ZNP	
13	11008876	BRASS FAUCET BLOCK INSERT P0049/A	
14	12000892	TECNOFIX CLAMP D=9,5 16700004	
15	12000413	TECNOFIX CLAMP D=8,5-9,5 FX55080	
16	12000931	OR 108 IN EPDM FDA 70 SH	
17	11001544	FAUCET CONNECTOR P0049	
18	16000380	5X8,9 SILICONE TUBE IN ROLL	
19	12000890	OR 2012 IN EPDM FDA 70 SH	
20	11004134	BRASS FAUCET SHAFT P0049	
21	20000653	KIT SPARES CPU P0049 + FAUCET BOARD 3SEN	WITH PAR.N°14 TA.2
		UP TO S/N. 9006SA40294417	
	11007569	TAP ELECTRONIC CARD G0053 ASSY.	
		FROM S/N. 9006SA40294418	
22	11001499	FORK SPRING FOR FAUCET P0049	
23	11004625	TEA/BRASS FAUCET CASING P0049	
24	11004135	PLAST/BRASS FAUCET SHAFT P0049 ASSY.	
25	NF11.052	OETIKER CLIP	
26	11001546	FAUCET STRAIGHT CONNECTOR P0049	
27	11001332	SUPPORT FOR BOILER-FAUCET-VALVE P0049	
28	189428600	THERMOSTAT 175° 1NT-08L-5125	
29	11001751	THERMOSTATES SPRING FOR BOILER	
30	11001750	ALUM.BOILER/V3 1300W ASSY.	230V
	11005608	ALUM.BOILER/V3 1300W ASSY.	120V
	11005609	ALUM.BOILER/V3 1300W ASSY.	100V
31	190800100	TEMPERATURE SENSOR NTC UL L=280MM	
32	20000591	BLOWDOWN VALVE CASING P0049 ASSY.	
33	20000592	BLOWDOWN VALVE CONNECTOR P0049 ASSY.	
34	20000590	BLOWDOWN VALVE COIL P0049 ASSY.	230V
	20000680	BLOWDOWN VALVE COIL P0049 ASSY.	120V
	20000681	BLOWDOWN VALVE COIL P0049 ASSY.	100V
	20000920	BLOWDOWN VALVE COIL P0049 ASSY.	220V-60HZ

POS	CODE	DESCRIPTION	NOTE
35	11000651	WATER LEVEL SENSOR BOARD P124	
36	11003670	BLACK TURBINE SUPPORT/V2 P0049	
37	JS01.022	SILICONE TUBE 5X10 60 SHORE IN ROLL	
38	12000781	TURBINE D=1,2 932-8521/90 ASSY.	
39	11001790	6POLES CONNECTOR LEV.+FLOWMETER P0049	230V
	11005648	6 POLES CONNE.LEVEL+FLOWMETER P0049 UL	100-120V
40	11006296	BLACK PUMP SUPPORT P0049 ASSY.	
41	11001778	2POLES CONNECTOR PUMP P0049	230V
	11005668	2POLES CONNECTOR PUMP P0049 UL	100-120V
42	140321961	OR 2031 IN TERMOIL	
43	12000140	ULKA PUMP EP5/S GW	230V-50HZ
	12000130	ULKA PUMP EP5/S GW	100V-50/60HZ
	12000142	ULKA PUMP EAP5/S 120V-60HZ	
	12000167	ULKA PUMP EP5/S GW 240V-50HZ	
	12000182	ULKA PUMP EP5/S GW 220V-60HZ	
44	147920150	90°CONNECTOR PUMP INLET	
45	12000005	ANTIDISTURB FILTER 10A FNC 1005474103P	
	12000007	ANTIDISTURB FILTER 16A F.NC.16.10.474.472.P	
46	11001054	90°CONNECTOR PUMP OUTLET P0049/B	
47	11001630	MILK ISLAND DESCARGING WATER CONNECT.	
48	11005284	BLACKBOIL. CONNECTORS COVER P0049/P0053	
	11008698	TEA/BRASS FAUCET P0049-P0053 ASSY.	
		WITH PART. N°16-17-19-20-22-23-24-26	
	11001543	BLOWDOWN VALVE P0049 230V ASSY.	
	11005751	BLOWDOWN VALVE P0049 100V ASSY.	
	11005604	BLOWDOWN VALVE P0049 120V ASSY.	
	11009021	BLOWDOWN VALVE P0049 220V-60HZ ASSY.	
		WITH PART. N°10-32-33-34	
	11002031	ALUM.BOILER P0049/C 230V ASSY.	
	11005776	ALUM.BOILER P0049/C 120V ASSY.	
	11005777	ALUM.BOILER P0049/C 100V ASSY.	
	11009110	ALUM.BOILER P0049/C 220V-60HZ ASSY.	
		WITH PART. N°03-09-11-12-14-15-18-27-28-29-30	
		31-47-48+TEA/BRASS FAUCET+BLOWD. VALVE	

Щоб переглянути та придбати необхідну запчастину, натисніть на її номер на малюнку, або на її номер, назву у таблиці з позначкою 🛒

Esp. E74106 Rev.06

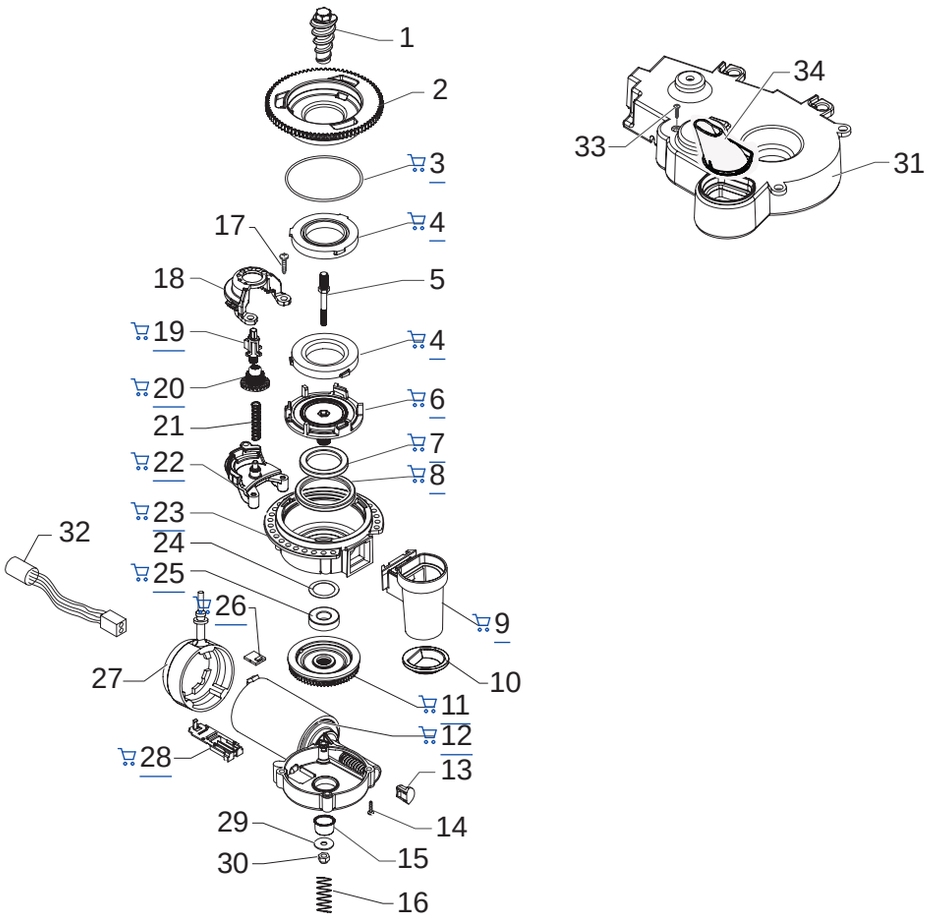

Saeco INTERNATIONAL GROUP

SUP031OR

Cod. 10000206-49-60-61-1340-41-1602-03
10001604-05-06-07-08-09-1770-1855-2520

POS	CODE	DESCRIPTION	NOTE
01	9141.001	SCREW OF INCREMENT	
02	149198250	UPPER GRINDER SUPPORT COFFEEGRINDER	
03	140328960	NBR FDA OR METRIC 0530-15	
04	146520100	BAKED CLAY GRINDER 48X28	
05	127473603	STEEL PIN M4-M6 FOR INCREMENT SCREW	
06	149198350	LOWER GRINDER SUPPORT COFFEEGRINDER	
07	123030300	AXIAL BEARING EKKO 342.35252	
08	140360500	FELT RING 45,4X39,4X4	
09	222870250	GROUND COFFEE OUTLET CONVEYOR ASSY.	
10	145854462	GROUND COFFEE CONT.SEAL LOWER SMART1	
11	226000300	GEAR SX Z=38 FOR GRINDER MOTION ASSY.	
12	11000513	MOTOR COFFEEGRINDER/V3.1 DOMEL ASSY	230V
	11000511	MOTOR COFFEEGRINDER/V3.1 DOMEL ASSY	120V
	11000512	MOTOR COFFEEGRINDER/V3.1 DOMEL ASSY	100V
13	149214800	CAP FOR WORM SCREW MC/V3 CENTRING	
14	129661702	PANELVIT TCB SCREW 3,5X25 D.7505 ZN	
15	11002873	INSULATOR BUSH FOR GRINDER MOTOR P124	
16	11000597	COFFEE GRINDER SUPPORT SPRING P124	
17	129660102	PANELVIT TCB SCREW 3,5X18 D.7505 Z	
18	11002508	UPPER GEAR SUPPORT COFFEEGRINDER P124	
19	11003446	BLACK INSERT FOR COFFEE GRINDER P0049	
20	11003784	COFFEE GRINDING ADJUSTMENT GEAR P0049	
21	11002572	GRINDER REGULATION SPRING P124	
22	11002613	LOWER GEAR SUPPORT COFFEEGRINDER P124	
23	142905450	UPPER BODY WITH COFFE.GROUND OUTLET	
24	128381800	CRINKLE WASHER 21,8X15,8X0,2	
25	123030200	RADIAL BEARING 61900.2RS1	
26	181540900	ELECTRONIC BOARD WITH SENSOR HAL506	
27	11001367	BLACK COFFEE GRINDER SUPPORT P0049	
28	149199050	SENSOR SUPPORT FOR COFF.GRIND.MOTOR	
29	128381902	GALVAN.FLAT WASH.DI=4,3 DE=14 SP=1,5	
30	123453102	SELF LOCK NUT M4 DIN 982 HIGH GALV.	
31	11001826	SOUNDPR. COVER FOR COFGRINDER P0053	
32	11003449	5POLES CONNECTOR MC SENSORS P0049	230V
	11005658	5POLES CONNECTOR MC SENSORS P0049 UL	100-120V
33	129661902	VITE TCB TORX 3,5X18 PLASTITE 45°	
34	11004199	CONVOGLIAT.CONDENSA GRUP.CAF.P0049 NER	
	11007416	GENERAL MOTOR MC V2 P0049 230V ASSY.	
	11007417	GENERAL MOTOR MC V2 P0049 120V ASSY.	
	11007418	GENERAL MOTOR MC V2 P0049 100V ASSY.	

POS	CODE	DESCRIPTION	NOTE

Щоб переглянути та придбати необхідну запчастину, натисніть на її номер на малюнку, або на її номер, назву у таблиці з позначкою

Esp. E74106 Rev.06

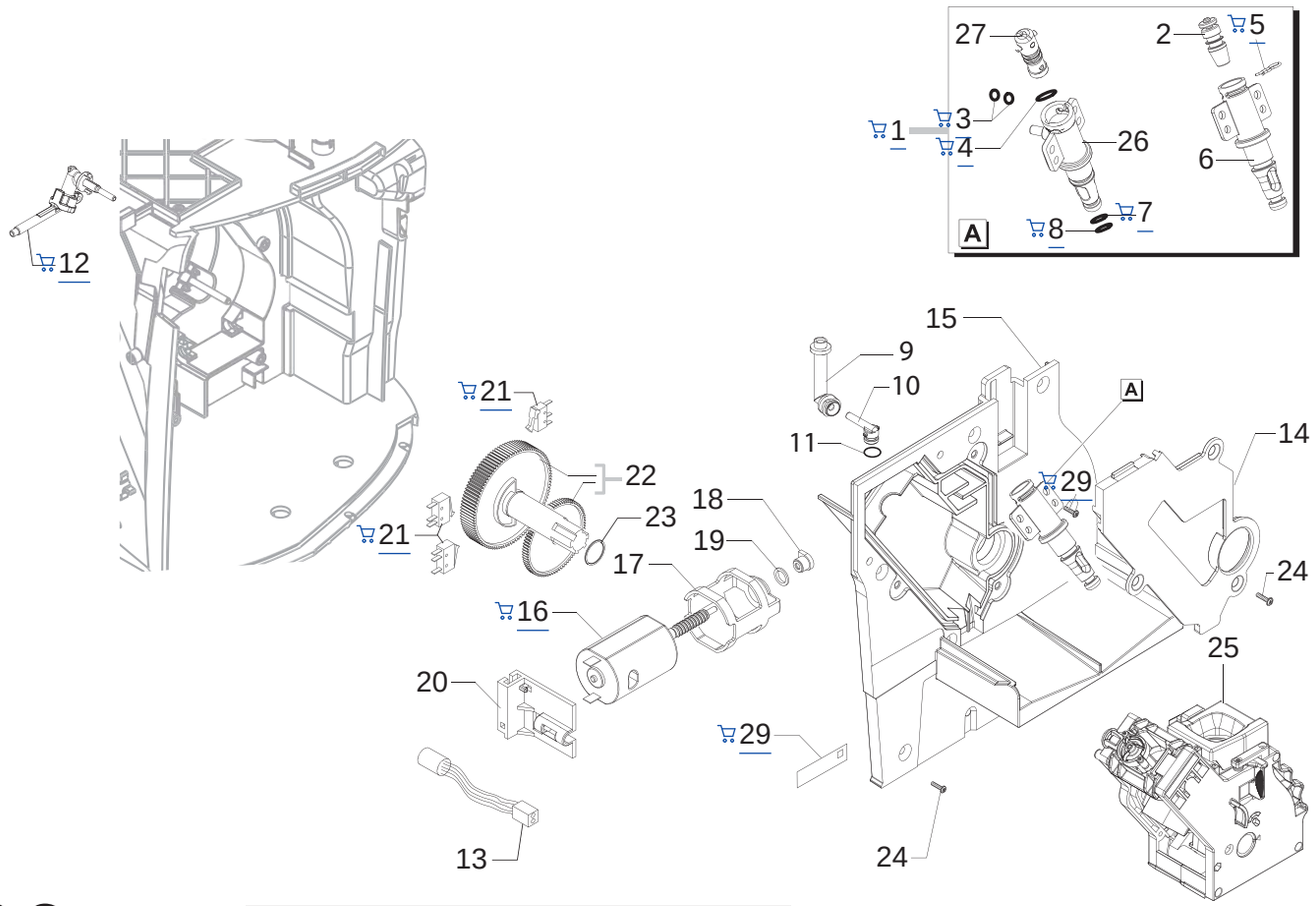

Saeco INTERNATIONAL GROUP

SUP031OR

Cod. 10000206-49-60-61-1340-41-1602-03
10001604-05-06-07-08-09-1770-1855-2520

POS	CODE	DESCRIPTION	NOTE
01	11005113	PIN V2 FOR BOILER P049/B ASSY.	
02	11000692	NIKELED BRASS CAP FOR PIN BOILER P119	
		UP TO S/N.9007SA40002250	
03	140328059	OR 2015 IN SILICONE PTFE/FDA	
04	140324459	OR METRICO 0060-20 SILICON.PTFE/FDA	
05	9011.144	FORK FOR TUBE D.4	
		UP TO S/N.9007SA40002250	
06		PARTICULARE NOT AVAILABLE	SEE PART. N°01
		UP TO S/N.9007SA40002250	
07	NM01.035	OR ORM 0090-20 SILICONE	
08	NM01.057	OR ORM 0050-20 SILICONE	
09	11004086	VALVE DESCARGING WATER 90° CONNECTOR	
10	11003648	COVER DESCARGING WATER 90° CONNECTOR	
11	140325462	OR METRIC 0070-20 IN SILICONE	
12	11003468	COFFEE DISPENSING VALVE P0049 ASSY.	
		FINO MATR. 9006SA40292687	
	11007647	V3 COFFEE DISPENSING VALVE P0049 ASSY.	
		DA MATR. 9006SA40292688	
13	11003661	REED SENSOR MK3-1A66-BV16451	
14	11001312	BLACK COVER FOR VAIN BOILER P0049	
	11009284	BLACK COVER FOR VAIN BOILER P0049 UL	
15	11006337	BLACK COVER FOR MOUNTING PLATE P0049 AS	
	11009287	BLACK COVER MOUNTING PLATE P0049 UL ASSY	
16	11003037	MOTOR FOR RATIOMOTOR ASSY.	
17	9121.044	ANTIVIBRATION FOR MOTOR	
18	9121.046	SINTERED BUSH FOR MOTOR	
19	148380200	WASHER BAKELIZZATE D=5,5	
20	11001331	BLACK MICROSWITCH SUPP. DUMP BOX P0049	
21	NE05.038	MICROSWITCH	
22	20000455	SPARES KIT GEARS FOR RATIOMOTOR P124	
		UP TO S/N 9007SA40439137	
	20000900	SPARES KIT GEARS FOR RATIOMOTOR V2	
		FROM S/N. 9007SA40439138	
23	9161.132	MYLAR WASHER FOR RATIOMOTOR	
24	129914102	SCREW K 35X12 WN 1423 GALVANIZED	
25	11002145	BLACK BREW UNIT 8GR. P124/SBS	
		SEE TAB. COD. EXPL. E90042	
26	11003801	PIN V2 FOR BOILER P119	
		FROM S/N.9007SA40002251	
27	11003820	CAP V2 FOR PIN BOILER P119	
		FROM S/N.9007SA40002251	

POS	CODE	DESCRIPTION	NOTE
28	129661902	VITE TCB TORX 3,5X18 PLASTITE 45°	
29	11000651	WATER LEVEL SENSOR BOARD P124	
		UP TO S/N 9007SA40439137	