Щоб переглянути та придбати необхідну запчастину, натисніть на її номер на малюнку, або на її номер, назву у таблиці з позначкою 🛒

Exp. E74044 Rev.12-01/12/11

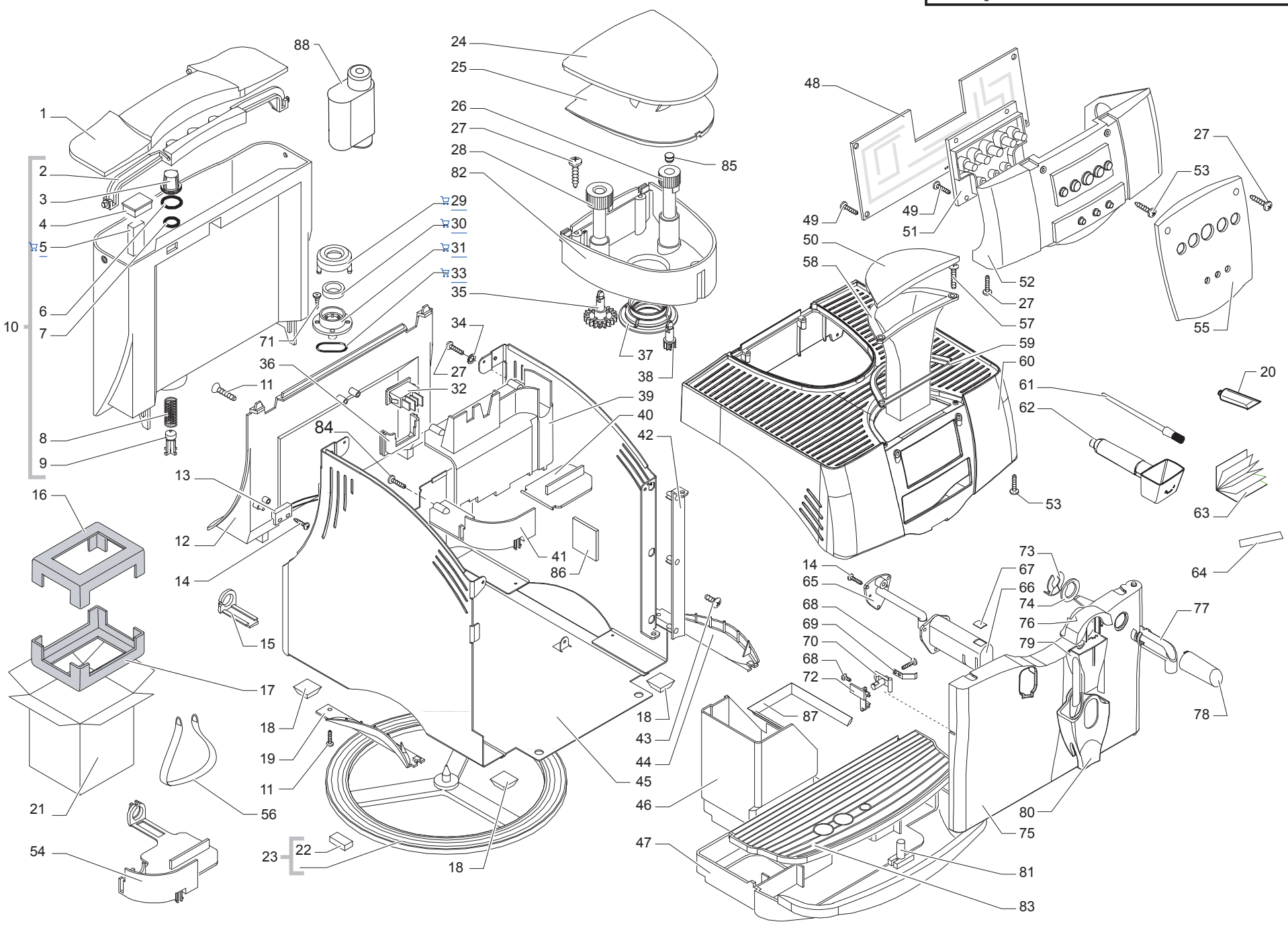

Saeco INTERNATIONAL GROUP

SUP 021 Y

Cod. 740802-05-07-09-10001370

POS	CODE	DESCRIPTION	NOTE
01	222762841	WATER CONTAINER LID SMART SILVER	
02	146580950	BLACK KNOB WATER CONTAINER LID SMAR	
03	224640200	EXTERNAL FILTER FOR WATER CONTAINER ASSY	WITH PART.N°06
04	149214359	BLACK CAP FOR FLOATING SPACE LAV.	
05	9161.112.150	LEVEL FLOAT GREY	
06	140328461	EPDM OR METRIC 0190-10	
07	140324362	OR METRIC 0060-30	
08	126764718	SPRING FOR WATER CONTAINER VALVE	
09	147660562	GREY WATER VALVE CONTAINER PISTON	
10	226476300	KIT WATER CONTAINER SMART NATURAL/GREY	
	226481780	KIT WATER CONTAINER SMART TRANSP/GREY	(J) WITHOUT PAR.N°3,6
11	129912902	SCREW TCB TORX 10 2,9X6,5 SHEET ZN-B	
12	149194650	SUPP.WATER CONTAIN.W/O LAMP HOUSING	
	149194618	SUPP.WATER CONTAIN. W/O LAMP HOUSING	
13	283551900	2 POLE LEVEL SENSOR AS.SMART	230V
	283551955	2 POLE LEVEL SENSOR AS.SMART	100V-120V
14	129532521	SCREW TSP2,9X9,5 DIN 7982 SS	
15		PARTICULAR NOT AVAILABLE	SEE PART.N°54
16	175897200	UPPER TECHMATE INSERT FOR BOX SMART	
17	13000300	LOWER TECHMATE INSERT FOR BOX SMART	
18	147623150	SQUARE ADHESIVE FOOT 5023 BLACK	
19	225920241	HANGRIP SX SMART SILVER	
20	11005044	SAECO KLUBER TRIBOSTAR SIL 2 TUBE 5GR.	
21	178506900	FLEXOGRAP.BOX 5COL.SAECO INCANTO DIG.	
22	9991.096	SQUARE ADHESIVE FOOT 8X15X3,2	
23	220380259	ROTATING RING SMART WITH 3 FEET	
24	222762641	BEAN COFF.CONTAIN.LID SMART SILVER	
25	142813879	TRAN./BLU LID SAFETY AROM.CAF.CON.SMAR	
26	227721359	GREY COFF. DOSE ADJUST.KNOB S/S.SMART	
27	129913902	SCREW TCB TORX 10 3X12 PLAST.ZN-B	
28	227721459	GRIND.ADJUSTM.GREY KNOB SMART S/SCR	
29	0701.031.150	SEAL COVER GREY	
30	145842900	WATER CONTAIN.VALVE SEAL GACO DIM14	
31	0701.014.150	SEAL CONTAINER GREY	
32	NE03.028	SWITCH B1031C1181000W	
33	140320461	OR ORM 0080-20 IN TERMOIL	
34	128310321	WASHER UNI 8842 A3 SS INOX	
35	146000850	GEAR COFF. GRIND. ADJUSTMENT COMBI	
36	149202550	BLACK SWITCH GENERAL SUPPORT SMART	
37	145852360	BEAN COFFEE CONTAINER SEAL SMART	
38	146001950	COFFEE DOSE ADJ.GEAR BLACK SMART	

POS	CODE	DESCRIPTION	NOTE
39	147755800	INTERN.CASING PROTECTION POWER CABLE	
40		PARTICULAR NOT AVAILABLE	SEE PART.N°54
41		PARTICULAR NOT AVAILABLE	SEE PART.N°54
42	222630150	DOOR HINGE SMART BLACK	**UP TO S/N 9003SA40323614**
	226481450	DOOR HINGE KIT SMART BLACK	
		FROM S/N 9003SA40323615 TO S/N 9005SA40022836	
	222630550	DOOR HINGE SMART BLACK	**FROM S/N 9005SA40022837**
	222630141	DOOR HINGE SMART SILVER	**UP TO S/N 9003SA40323614**
	226481441	DOOR HINGE KIT SMART SILVER	
		FROM S/N 9003SA40323615 TO S/N 9005SA40022836	
	222630541	DOOR HINGE SMART SILVER	**FROM S/N 9005SA40022837**
43	129740202	SCREW TSP PH/TT 4X10 UNI 8113 ZNP	WITH HINGE V1
		UP TO S/N 9005SA40022836	
	129511903	SCREW TCB 2,9X6,4 DIN 7981 BZ NICK	WITH HINGE V3
		FROM S/N 9005SA40022837	
44	225920141	HANGRIP DX SMART SILVER	
45	222482450	BLACK CASING WITH KNOB SMART ASSY.	**UP TO S/N 9003SA40323614**
	222360450	BLACK CASING SMART	**FROM S/N 9003SA40323615**
	222482441	SILVER CASING WITH KNOB SMART ASSY.	**UP TO S/N 9003SA40323614**
	11001021	MATT SILVER CASING SMART	**FROM S/N 9003SA40323615**
	222482491	AMARANTH CASINGWITH KNOB SMART ASSY.	**UP TO S/N 9003SA40323614**
	222360491	AMARANTH CASING SMART	**FROM S/N 9003SA40323615**
46	11005555	BLACK DUMP BOX SMART SILK/SCREEN	
47	229630850	BLACK DRIP TRAY SMART	
	229630891	AMARANTH DRIP TRAY SMART	
48	181550758	TERMINAL BOARD FOR CA SMART 230V	WITH ALL.BOILER CASING
	181553158	TERMINAL BOARD SMART SUP021Y 230V	WITH AL.BO.WITH RESIST.
	11013632	CPU+SW ASSEMBLY INCANTO BASE V1 230V	WITH AL.BO.WITH RESIST.
		(REINFORCE SILICONE TUBE)	
	181550755	TERMINAL BOARD FOR CA SMART 120V	WITH ALL.BOILER CASING
	181553155	TERMINAL BOARD SMART SUP021Y 120V	WITH AL.BO.WITH RESIST.
49	129913202	SCREW TCB TORX 10 3X8 PLAST.ZN-B	
50	222762741	GROUND COFF.CONTEN.LID SMART SILVER	
51	281561300	TOUCH PANEL ELECTRON.BOARD AS.SMART	
52	149194450	BLACK SUPPORT ELECTRONIC CARD SMART	
52	149194418	BLACK SUPPORT ELECTRONIC CARD SMART	
53	129533202	SCREW TSPTORX T10 3,5X9,5 D7982 NI	
54	148601650	1GROMMET FOR POWER CABLE SMART	
55	224884441	FRONT PANEL SILVER SMART S/S.INCANT	
56	179990300	BAND FOR LIFTING L=1550 H=300 MM	
57	12000895	SCREW TSP TORX 10 3X10 PLAST.SS	

Щоб переглянути та придбати необхідну запчастину, натисніть на її номер на малюнку, або на її номер, назву у таблиці з позначкою 🛒

Exp. E74044 Rev.12-01/12/11

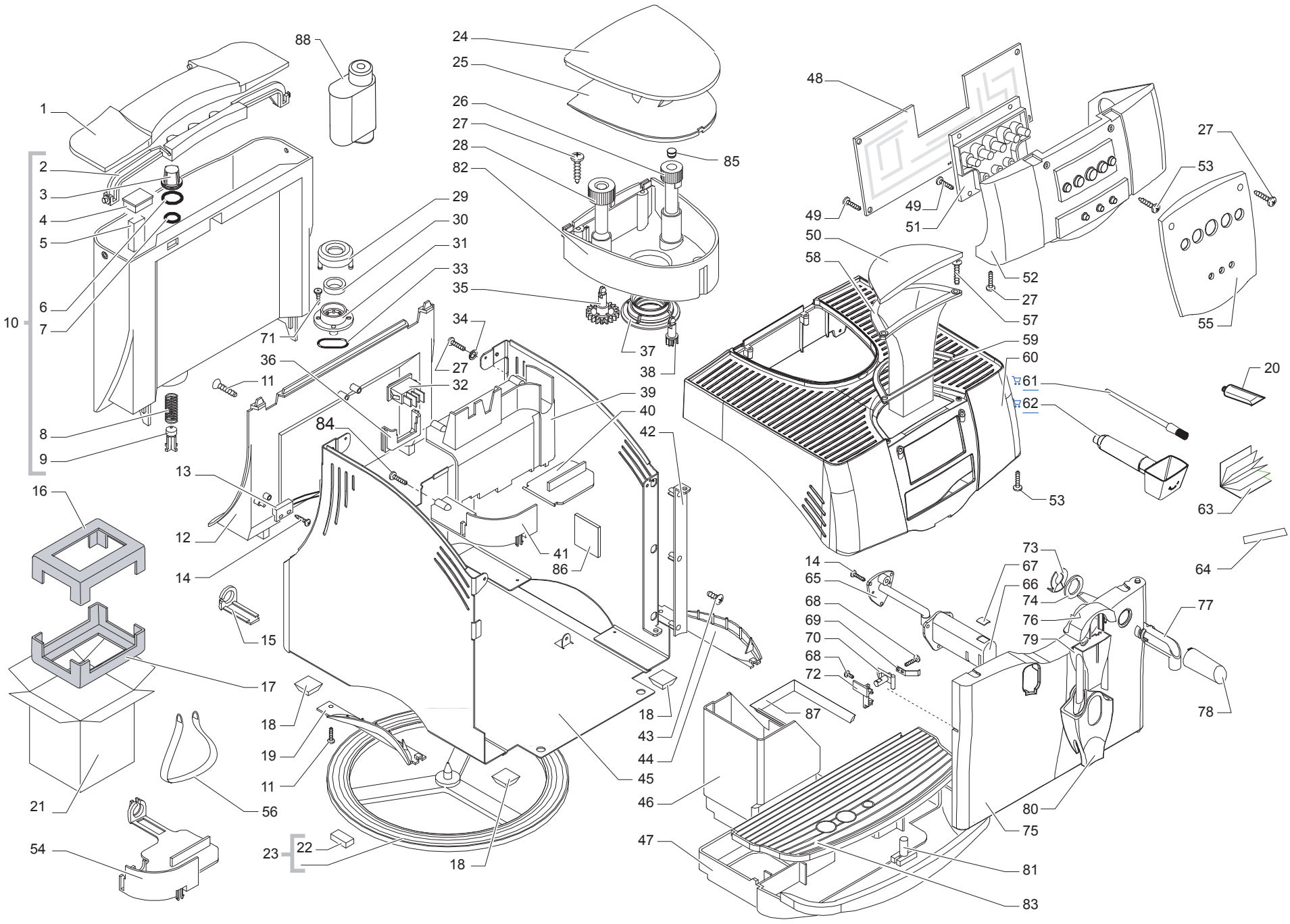

Saeco INTERNATIONAL GROUP

SUP 021 Y

CE **Cod. 740802-05-07-09-10001370**

POS	CODE	DESCRIPTION	NOTE
58	149260850	HOPPER BLACK GROUND COF.DOSER SMART	
59	145851950	GROUND COFFEE CONT.SEAL UPPER SMART	
60	222810850	BLACK COVER W.O/OPEN SMART S/SCREEN	
	222810891	AMARAN.COVER W.O/OPEN SMART S/SCREEN	
	222810841	SILVER COVER W.O/OPEN SMART S/SCREEN	
	11000026	BLACK COVER W.O/OPEN SMART/UL S/SCREEN	J
🛒 61	127390100	BRUSH FOR CLEANING	
🛒 62	146680850	BLACK COFFEE MEASURE SMART	
63	15002069	INSTRUC.MANUAL V2 SAECO SUP021Y I/D/GB/F	
	15002100	INSTRUCT.MANUAL V2 SAECO SUP021Y E/P/NL	
	225930205	INST.MANUAL SAECO SUP021Y BRASIL ASS.	
64	0301.961	WATER HARDNESS TEST	
65	149501050	BLACK COFFEE DISPENSING TUBE SMART	
	149501051	BLACK COFFEE DISPENSING TUBE SMART	J
66	229183041	SILVER COFF.DISPE.HEAD SUP.SMART S/SCR	
67	222762541	SILVER COFFEE DISPENSER SUPP.LID SMART	
68	129511821	SCREW TCB 2,9X6,4 DIN 7981 SS	
		UP TO S/N 9003SA40006718	
	129910921	HI-LO TC SCREW 3X10 STEEL	
		FROM S/N 9003SA40006719	
69	126837421	SPRING DESENGAGE LEVER DOOR SMART	
		UP TO S/N 9003SA40006718	
70	146313540	DISENGAGE LEVER GREY/SIL.DOOR SMART	
		UP TO S/N 9003SA40006718	
	146313740	DISENG. LEVER GREY/SILVER DOOR SMART	
		FROM S/N 9003SA40006719	
71	129535721	SCREW TSP3,5X9,5 DIN 7982 SS	INOX
72	147572240	STOP PLATE LEVER DOOR GREY/SILV.SM.	
		UP TO S/N 9003SA40006718	
73	NF11.084	FOLK SPRING	
74	9161.384	SPACER FOR CONNECTION STEAM TUBE	
75	228982350	DOOR SMART BLACK	
	228982341	DOOR SMARt SILVER	
	228982391	AMARANTH DOOR SMART	
76	222762441	SILVER COFFEE DISPENSER LID SMART	
77	147921750	BLACK CONNECTOR STEAM TUBE SMART	
78	222822641	SILVER COVER CONNEC.STEAM TUBE SMART	
79	147370350	MOBILE PART COFFEE DISPENSIG SMART	
	147370351	MOBILE PART COFFEE DISPENSIG SMART	J
80	222860241	SILVER COFFEE DISPENSER SMART	
81	145501211	RED FLOAT FOR DRIP TRAY SMART	

POS	CODE	DESCRIPTION	NOTE
82	142713879	BEAN CONTAINER TRANSP/BLUE SMART	
83	225741041	SILVER GRATE SMART	
84	129660304	PANELVIT TCB SCREW 3X10 DIN 7505 BU	
85	149213059	CAP FOR KNOBS BEAN CONTAINER	
86	225304200	ADHESIVE AERSTOP (35X4) L=35 MM	
87	229170450	SEALING SUPPORT AS.WATER DRIP TRAY	
88	21001404	ACC SAE BRITA UNI.WAT.FILTERX1 EUR-ASIA	

Щоб переглянути та придбати необхідну запчастину, натисніть на її номер на малюнку, або на її номер, назву у таблиці з позначкою 🛒

Exp. E74044 Rev.12-01/12/11

ALLUMINIUM BOILER
UP TO S/N 9003SA40303633

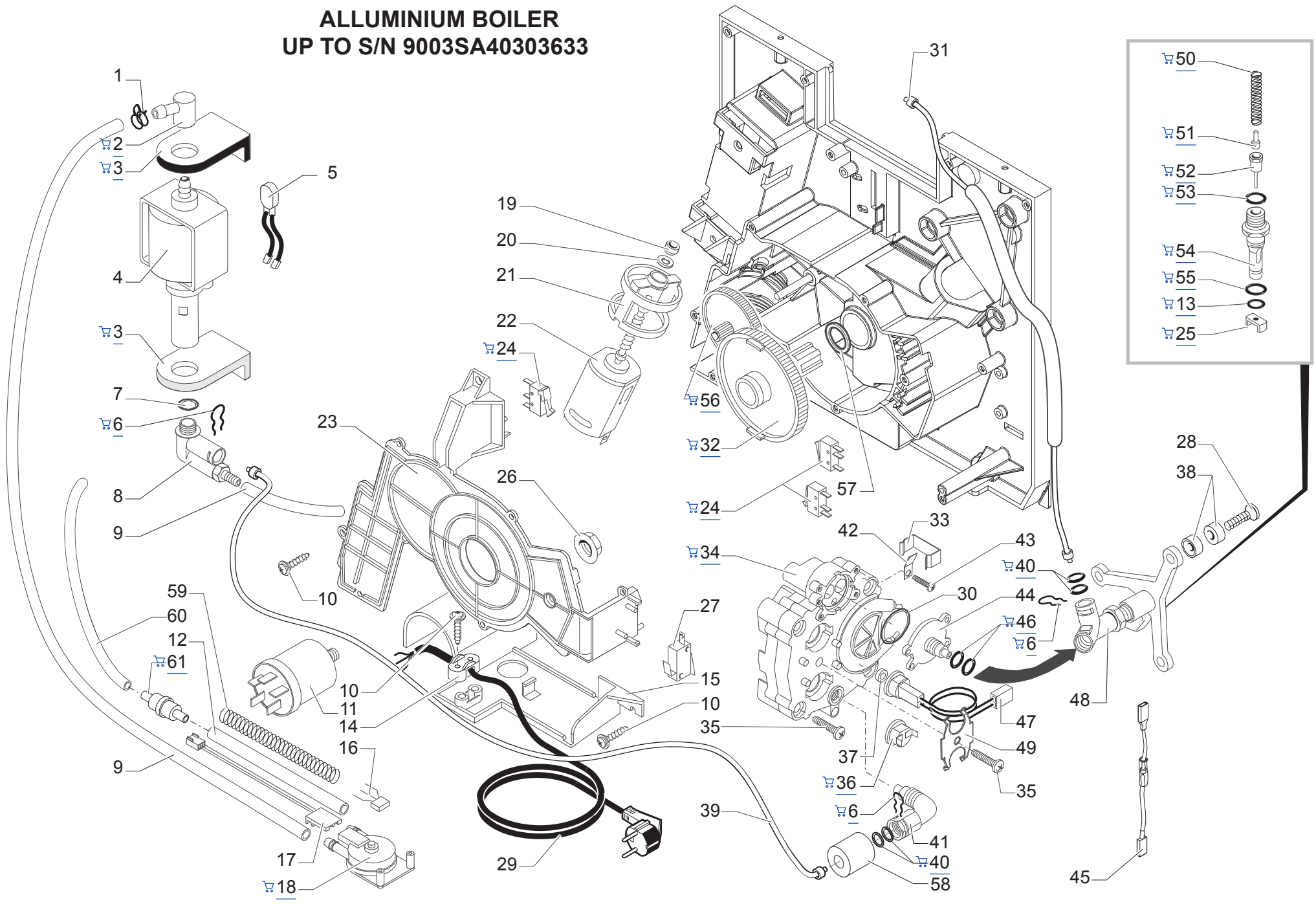

Saeco INTERNATIONAL GROUP

SUP 021 Y

CE

Cod. 740802-05-07-09-10001370

POS	CODE	DESCRIPTION	NOTE
01	184320200	SPRING HOSE CLAMP D=9,5MM	
🛒 02	147920150	90°CONNECTOR PUMP INLET	
🛒 03	149185850	EATON PUMP SUPPORT MAGIC 4002012	
04	12000140	ULKA PUMP EP5/S GW	230V-50HZ
	12000131	ULKA PUMP EP5/S	120V-60HZ
	12000130	ULKA PUMP EP5/S GW	100V-50/60HZ
05	0311.807	YELLOW HARNESS KLIXON JP 13	230V
	289202600	THERMAL PROTECTOR 120°C	120V
🛒 06	9011.144	FORK FOR TUBE D.4	
07	140321961	OR 2031 IN TERMOIL	
08	229451900	ASSY SAFETY VALVE TO 90° SMART	
09	149360200	SILICONE TUBE 5X8 70SR	IN ROLL
10	129670202	TCB PANELVIT SCREW 3,5X16 TESTA D=8 ZNP	
11	184651100	ANTIDISTURB FILTER 0,47X2+1000Y2+0,5L	230V
	184651500	ANTIDISTURB FILTER 16A FNC 1610474472A	120V
12	JS01.022	SILICONE TUBE 5X10 60 SHORE	IN ROLL
🛒 13	NM01.057	OR ORM 0050-20 SILICONE	
14	148600600	CABLE CLAMP V0 MAGIC ESP COMBI UL	
15	149194800	NATURAL TURBINE SUPPORT SMART	
16		PARTICULAR NOT AVAILABLE	SEE PART.N°18
17	283551300	3POLE CONNECT.AS.TURBINE JP18 SMART	
🛒 18	286473300	-M-VDE TURBINE WITH SENSOR KIT	WITH PART.N°16
19	9121.046	SINTERED BUSH FOR MOTOR	
20	148380200	WASHER BAKELIZZATE D=5,5	
21	147753250	R.MOTOR ANTIVIBRAT. PROTECT. MAGIC	
22	286891058	GEN.ASS.MOTOR FOR RATIOMOTOR	230V
	286891155	GENER.MOT.FOR RATIOMOTOR SMART UL AS.	120V
23	9161.331.920	TRANSPARENT RATIOMOTOR COVER	
🛒 24	NE05.038	MICROSWITCH	
🛒 25	145893000	CURSOR INSERT BOIL.VALVE NEW MAGIC	
26	123453602	FLANGE NUT M8 TOOTHED BASE GALV.	
27	186723800	MICROSWITCH SAIA X3M502K2KAM92AS	
28	U044.017	SCREW TSPC M5,0X20 UNI 7688 GALV.	
29	183910450	POWER CABLE SCHUKO BLACK L=1500	
	183921650	POWER CABLE SJT3C USA BLACk 3F.L=1590	BR
	183940250	BLACK POW. CABLE AUSTR.H05+FAST.L=1500	
	183980450	POWER CABLE JAPPON VCTF BLACK L=1590	
30	140324562	OR 2106 IN SILICONE	
31	227874100	CONNECTOR AS.TEFLON 2X4 L=275 MM	
🛒 32	9121.069.150	GEAR Z=108 FOR MOUNTING PLATE M4000	
33	9011.054	SPRING FOR THERMAL FUSE	

POS	CODE	DESCRIPTION	NOTE
🛒 34	9019.A61.00A	BOILER CASINGS ASS. PROFESS.	230V
	9019.A61.00F	BOILER CASINGS ASS. PROFESS.	120V
	9019.A61.00R	BOILER CASINGS ASS. PROFESS.	100V
35	129828502	TCB SCREW M6X30 UNI 7687 ZNP	
🛒 36	NE09.006	THERMOSTAT 170°NC FAST. 90°+WASHER	
37	123591222	ALUM.SPACER NEW FOR SENSOR MAGIC	
38	9161.206	INSULATING SPACER FOR BOILER	
39	227874300	TEFLON TUBE 2X4 L=135 MM ASSY	
		UP TO S/N 20014171920	
	227872400	TEFLON TUBE 2X4 L=115 MM ASSY	
		FROM S/N 20014171921	
🛒 40	NM02.028	OR 2015 EPDM FDA	
41	9991.150	BRASS CONNECTOR 1/8" CONICAL AT 90°	
42	NE15.026	MALE TONGUE 45° 6,3 D.5,2	
43	U046.003	SCREW TCBC M4,0X12 INDENT. WASH.8	
44	229182920	BRASS SUPPORT BOIL.W/O.VALVE M4000	
45	183441362	CABLE 1WIRE SILIC.BLUE TH/FUSE 192°	
45	183441862	CABLE 1WIRE SILIC.BLUE AWG18 TH/FUSE192°	
🛒 46	140321462	OR 2018 IN SILICONE	
47	288581358	SENSOR ASS.CA MP5000/SMART	230V
	288581355	SENSOR ASS.CA MP5000/SMART	120V
48	229170600	CASING SUPP.BRASS AS.BOIL.M4000/SM.	
49	126834600	SPRING FIXING 2 THERMOSTATS MAGIC	
🛒 50	9011.132	SPRING FOR PIN	
🛒 51	11009013	TEA/BRASS PIN FOR PISTON L=10	
🛒 52	11009019	TEA/BRASS PISTON L=20,9 ASSY.	
🛒 53	140320459	OR METRICO 0080-20 SILICON.PTFE/FDA	
🛒 54	9011.100	PEG FOR VALVE IN PLASTIC	
🛒 55	NM01.035	OR ORM 0090-20 SILICONE	
🛒 56	9121.042	GEAR Z.12/90	
57	9161.132	MYLAR WASHER FOR RATIOMOTOR	
58	147756562	PROTECTION FOR FOLK SPRING TUBE D=4	
59	228950600	SPIRALITE 8X10 (P3) L=150 MM	J
60	JS01.022	SILICONE TUBE 5X10 60 SHORE IN ROLL	J
🛒 61	144650300	SUCTION FILTER GAUZE NET 500 (NEW)	J
	282130958	ALUM.GEN.BOIL.AS.230V M4000SMART/2R	COMPLETE
	282130955	ALUM.GEN.BOIL.AS.120V M4000SMART/2R	COMPLETE
	282130954	ALUM.GEN.BOIL.AS.100V M4000SMART/2R	COMPLETE

Щоб переглянути та придбати необхідну запчастину, натисніть на її номер на малюнку, або на її номер, назву у таблиці з позначкою 🛒

Exp. E74044 Rev.12-01/12/11

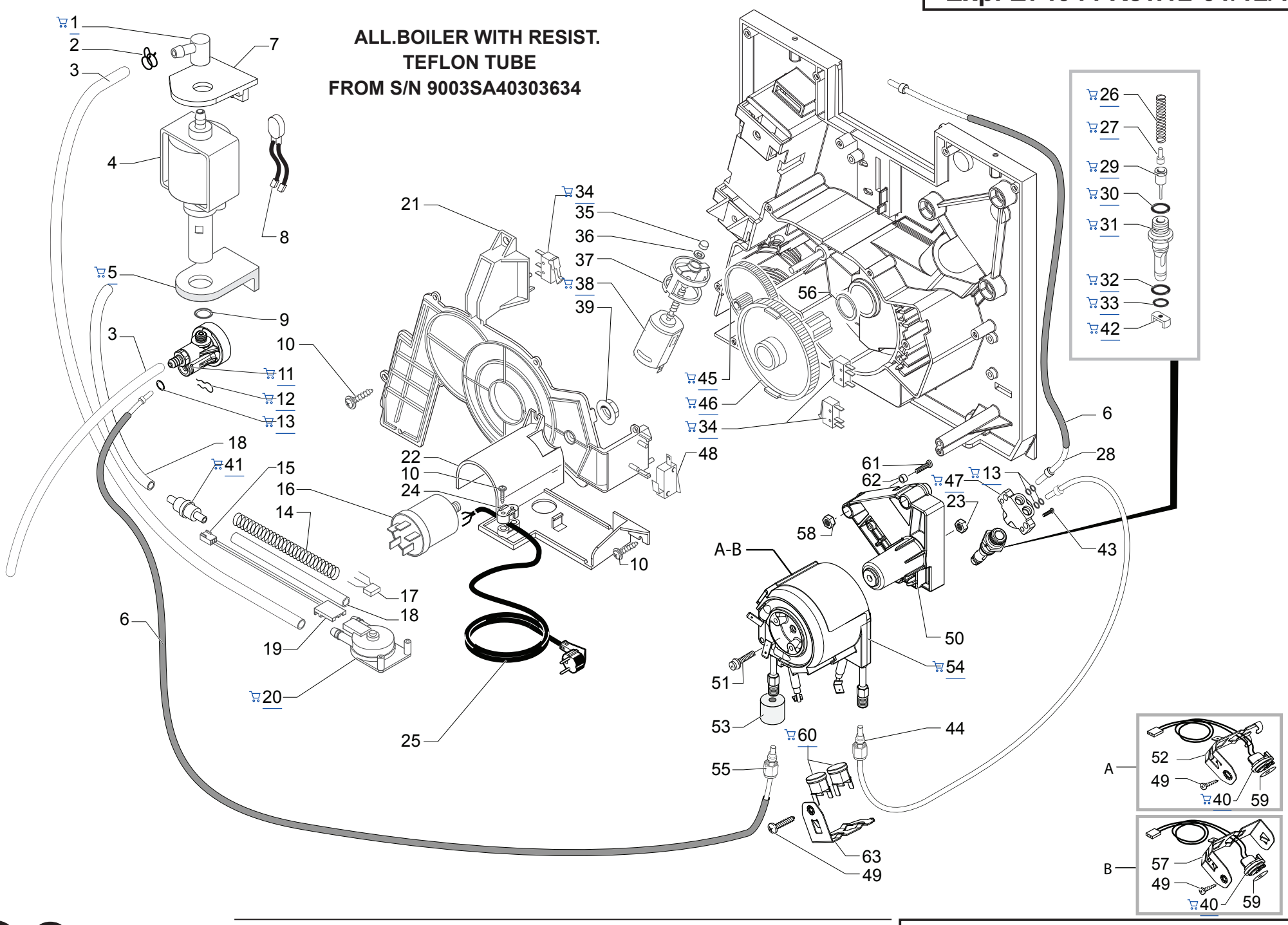

Saeco INTERNATIONAL GROUP

SUP 021 Y

CE

Cod. 740802-05-07-09-10001370

POS	CODE	DESCRIPTION	NOTE
01	147920150	90°CONNECTOR PUMP INLET	
02	184320200	SPRING HOSE CLAMP D=9,5MM	
03	149360200	SILICONE TUBE 5X8 70SR	IN ROLL
04	12000140	ULKA PUMP EP5/S GW	230V-50HZ
	12000131	ULKA PUMP EP5/S	120V-60HZ
	12000130	ULKA PUMP EP5/S GW	100V-50/60HZ
05	149185850	EATON PUMP SUPPORT MAGIC 4002012	
06	149361200	BLACK SILICONE TUBE 7,5X9,3	IN ROLL
07	149205710	PUMP SUPPORT HOLE 13,2 RED	
08	0311.807	YELLOW HARNESS KLIXON JP 13	230V
	289201000	THERMAL. PROTECT 120°C CABLE.125/365	100V-120V
09	140321961	OR 2031 IN TERMOIL	
10	129914002	SCREW TCB TORX 10 3,5X16 PLAST.ZN-B	
11	229452100	COMPENSATION AND SAFETY VALV. 16BAR AS.	
12	9011.144	FORK FOR TUBE D.4	
13	140328059	OR 2015 IN SILICONE PTFE/FDA	
14	228950600	SPIRALITE 8X10 (P3) L=150 MM	J
15	283551300	3POLE CONNECT.AS.TURBINE JP18 SMART	
16	184651100	ANTIDISTURB FILTER 0,47X2+1000Y2+0,5L	230V
	184651500	ANTIDISTURB FILTER 16A FNC 1610474472A	120V
	12001353	LOCKING SCREW ANTIDISTURB FILTER 16A	100V
17		PARTICULAR NOT AVAILABLE	SEE PART.N°20
18	JS01.022	SILICONE TUBE 5X10 60 SHORE	IN ROLL
19	9161.018	BRACKET FOR TURBINE	
20	286473300	-M-VDE TURBINE WITH SENSOR KIT	WITH PART.N°17
21	9161.331.920	TRANSPARENT RATIOMOTOR COVER	
22	149194800	NATURAL TURBINE SUPPORT SMART	
	11009371	NATURAL TURBINE SUPPORT SMART UL	
23	123453902	SELF-LOCKI.NUT M5X0,8 DIN 980 CLA.8	
24	148600600	CABLE CLAMP V0 MAGIC ESP COMBI UL	
25	183930250	POW.CABLE CH BLACK H05+3FAST.L=1500	
	183980450	POWER CABLE JAPPON VCTF BLACK L=1590 MM	
	183910450	POWER CABLE SCHUKO BLACK L=1500	
	183921650	POWER CABLE SJT3C USA BLACk 3F.L=1590	
	183940250	BLACK POWER CABLE AUSTR.H05+FAST.L=1500	
26	9011.132	SPRING FOR PIN	
27	11009013	TEA/BRASS PIN FOR PISTON L=10	
28	227874500	CONNECTOR AS.TEFLON 2X4 L=330 MM	
29	11009019	TEA/BRASS PISTON L=20,9 ASSY.	
30	140320459	OR METRICO 0080-20 SILICON.PTFE/FDA	
31	9011.100	PEG FOR VALVE IN PLASTIC	
32	NM01.035	OR ORM 0090-20 SILICONE	
33	NM01.057	OR ORM 0050-20 SILICONE	
34	NE05.038	MICROSWITCH	
35	9121.046	SINTERED BUSH FOR MOTOR	
36	148380200	WASHER BAKELIZZATE D=5,5	
37	9121.044	ANTIVIBRATION FOR MOTOR	

POS	CODE	DESCRIPTION	NOTE
38	11003037	MOTOR FOR RATIOMOTOR ASSY.	
39	123453602	FLANGE NUT M8 TOOTHED BASE GALV.	
40	288582300	SENSOR ELECT.BOARD WITH CONNECTOR ASSY.	
41	144650300	SUCTION FILTER GAUZE NET 500 (NEW)	J
42	11005099	NATURAL CURSOR V2 FOR BOILER P119	
43	129910103	HI -LO TC SCREW 3,5X15 RIF.910189	
44	227876800	CONNECTOR TEFLON 2X4 L=235 MM ASSY.	
45	9121.042	GEAR Z.12/90	
46	9121.069.150	GEAR Z=108 FOR MOUNTING PLATE M4000	
47	147922700	BOILER SUPPORT CONNECTOR	
48	186723800	MICROSWITCH SAIA X3M502K2KAM92AS	
49	129573202	SCREW TCB PH/TT 4X8 UNI 8112 ZNP	
50	20000204	SPARES KIT SUPPORT BOILER SMART	
		UP TO S/N 9005SA40256916	
	149197700	SUPPORT FOR ALLUMINIUM BOILER SMART	
		FROM S/N 9005SA40256917	
51	129932202	ROUND HEAD SCREW 10.9 M5X20 GALV	
52	126838217	SENSOR FIXING SPRING	
		FROM S/N 9004SA40097915	
53	147756562	PROTECTION FOR FOLK SPRING TUBE D=4	
54	282058858	ALUM.BOILER WITH RESISTANCE 1100W	230V
	282058855	ALUM.BOILER WITH RESISTANCE 275W-	120V
	282058854	ALUM.BOILER WITH RESISTANCE 1100W	100V
55	227874900	CONNECTOR AS.TEFLON 2X4 L=250 MM	
56	9161.132	MYLAR WASHER FOR RATIOMOTOR	
57	126838017	SENSOR FIXING SPRING	
		UP TO S/N 9004SA40097914	
58	U310.003	NUT SELF LOCK.M5 UNI 7473	
		FROM S/N 9004SA40097914	
59	145951600	ELECTRIC INSULATING DISK D=16	
60	189428600	THERMOSTAT 175° 1NT-08L-5125	100V-120V
	189428200	THERMOSTAT 175° 1NT-08L-3794	230V
61	U044.020	SCREW TSP M5,0X30 UNI 7688 GALV.	
		UP TO S/N 9005SA40256916	
	129932502	SCREW TCEI 5X30 PLAST.ZN-B	
		FROM S/N 9005SA40256917	
62	9161.206	INSULATING SPACER FOR BOILER	
63	126838117	2 THERMOSTATS FIXING SPRING	
	282133658	ALUM.BOILER WITH RESISTANCE SMART 230V	COMPLETE
	11000153	ALU.BOILER WITH RESISTANCE SMART V3 120V	COMPLETE
	11000022	ALU.BOILER WITH RESISTANCE SMART V3 100V	COMPLETE
		CON PART. POS. N° 13-26-27-28-29-30-31-32-33-40-42-43-44-47-49-50-51-52-53-54-55-57-59-60-63-64	

Щоб переглянути та придбати необхідну запчастину, натисніть на її номер на малюнку, або на її номер, назву у таблиці з позначкою 🛒

Exp. E74044 Rev.12-01/12/11

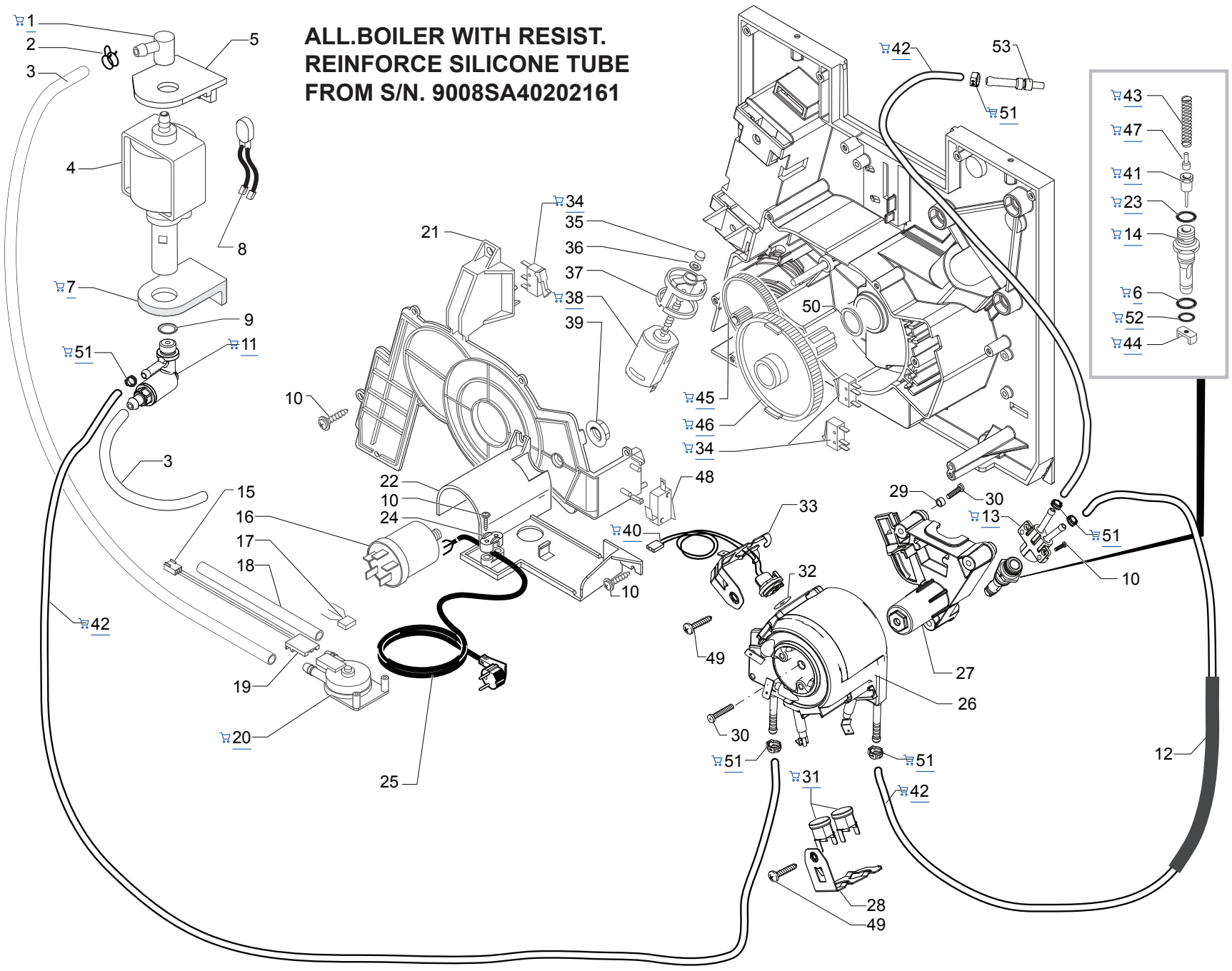

Saeco INTERNATIONAL GROUP

SUP 021 Y

Cod. 740802-05-07-09-10001370

POS	CODE	DESCRIPTION	NOTE
01	147920150	90° INLET CONNECTOR PUMP	
02	184320200	SPRING HOSE CLAMP D=9,5MM	
03	149360200	SILICONE TUBE 5X8 70SR	IN ROLL
04	12000140	ULKA PUMP EP5/S GW	230V-50HZ
	12000167	ULKA PUMP EP5/S GW	240V-50HZ
05	149205710	PUMP SUPPORT HOLE 13,2 RED	
06	NM01.035	OR ORM 0090-20 SILICONE	
07	149185850	EATON PUMP SUPPORT MAGIC 4002012	
08	0311.807	YELLOW HARNESS KLIXON JP 13	230V
09	140321961	OR 2031 IN TERMOIL	
10	129914002	SCREW TCB TORX 10 3,5X16 PLAST.ZN-B	
11	11004689	TEA/BRASS SAFETY VALVE 16-18 BAR ASSY.	
12	11010624	TRANSP.SILICONE TUBE 10,5X12,3 L=200 MM	
13	11002606	BOILER SUPPORT CONNECTOR	
14	9011.100	PEG FOR VALVE IN PLASTIC	
15	283551300	3POLE CONNECT.AS.TURBINE JP18 SMART	
16	184651100	ANTIDISTURB FILTER 0,47X2+1000Y2+0,5L	
17		**PARTICULAR NOT AVAILABLE**	SEE PART.N°20
18	JS01.022	SILICONE TUBE 5X10 60 SHORE	IN ROLL
19	9161.018	BRACKET FOR TURBINE	
20	286473300	-M-VDE TURBINE WITH SENSOR KIT	WITH PART.N°17
21	9161.331.920	TRANSPARENT RATIOMOTOR COVER	
22	149194800	NATURAL TURBINE SUPPORT SMART	
23	140320459	OR ORM 0080-20 IN SILICONE PTFE/FDA	
24	148600600	CABLE CLAMP V0 MAGIC ESP COMBI UL	
25	183910450	POWER CABLE SCHUKO BLACK L=1500	
	183940250	BLACK POWER CABLE AUSTR.H05+FAST.L=1500	
	11001845	BLACK POW.CABLE KOREA H05VV-F 3X1 L=1600	
	183930250	POW.CABLE CH BLACK H05+3FAST.L=1500	
26	11004667	ALUM.BOILER WITH RESISTANCE	230V-1100W
27	11004209	SUPPORT FOR ALLUMINIUM BOILER SMART	
28	126838117	2 THERMOSTATS FIXING SPRING	
29	9161.206	INSULATING SPACER FOR BOILER	
30	129932502	SCREW TCEI 5X30 PLAST.ZN-B	
31	189428600	THERMOSTAT 175° 1NT-08L-5125	
32	145951600	ELECTRIC INSULATING DISK D=16	
33	126838217	SENSOR FIXING SPRING	
34	NE05.038	MICROSWITCH	
35	9121.046	SINTERED BUSH FOR MOTOR	
36	148380200	WASHER BAKELIZZATE D=5,5	
37	9121.044	ANTIVIBRATION FOR MOTOR	

POS	CODE	DESCRIPTION	NOTE
38	11003037	MOTOR FOR RATIOMOTOR ASSY.	
39	123453602	FLANGE NUT M8 TOOTHED BASE GALV.	
40	288582300	SENSOR ELECT.BOARD WITH CONNECTOR ASSY.	
41	11005099	NATURAL CURSOR V2 FOR BOILER P119	
42	16000380	5X8,9 SILICONE TUBE	IN ROLL
43	9011.132	SPRING FOR PIN	
44	9011.099	M CURSOR FOR BOILER VALVE IN PLASTIC	
45	9121.042	GEAR Z.12/90	
46	9121.069.150	GEAR Z=108 FOR MOUNTING PLATE M4000	
47	11009013	TEA/BRASS PIN FOR PISTON L=10	
48	186723800	MICROSWITCH SAIA X3M502K2KAM92AS	
49	129573202	SCREW TCB TORX 20 M4X8 AUTOFORMING ZN-B	
50	9161.132	MYLAR WASHER FOR RATIOMOTOR	
51	12000892	OETIKER CLAMP D=9,5 16700004	
52	NM01.057	OR ORM 0050-20 SILICONE	
53	11000750	TEA/BRASS CONNECTOR FOR SILICONE TUBE	
	11010086	ALU.BOILER WITH RESISTANCE SMART V2 230V	COMPLETE

Щоб переглянути та придбати необхідну запчастину, натисніть на її номер на малюнку, або на її номер, назву у таблиці з позначкою 🛒

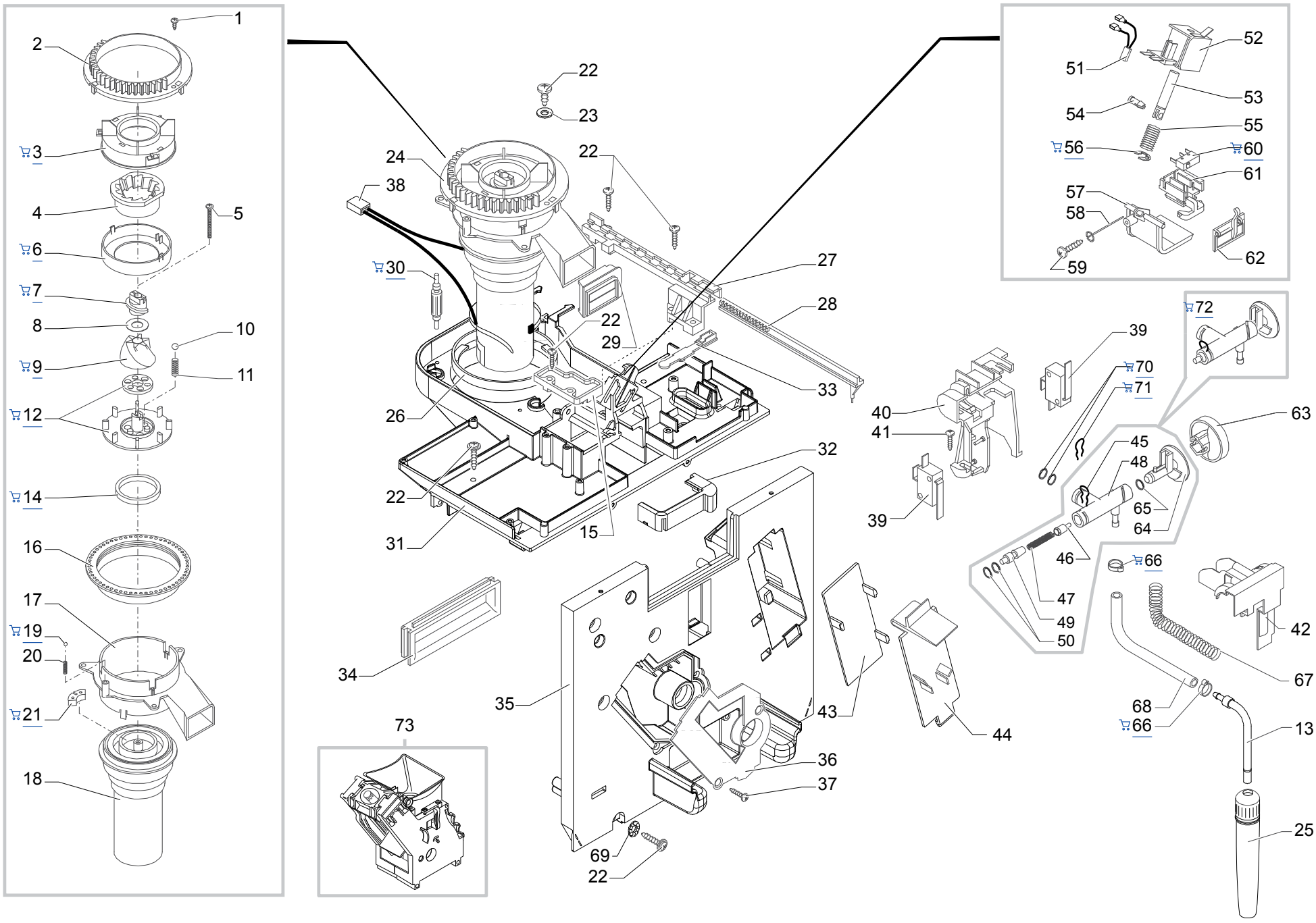

Saeco INTERNATIONAL GROUP

SUP 021 Y

CE

Cod. 740802-05-07-09-10001370

POS	CODE	DESCRIPTION	NOTE
01	129912902	SCREW TCB TORX 10 2,9X6,5 SHEET ZN-B	
02	148650250	SECTOR GEARGR. ADJUSTMENT KNOB COMBI	
03	149186150	BLACK UPPER GRINDER SUPPORT MAGIC	
04		PART.NOT AVAILABLE	SEE PART.N°09
05	129931002	TORX SCREW T10 TCB 3,5X40 SX ZNG	
06	142844550	UPPER GRINDER COVER COFF.GRIND. MAGIC	
07	147470763	INCREASE SCREW PIN COFF.GRINDER MAGIC	
08	U201.002	PLAIN WASHER 10X16X0,2DIN 988 GAL	
09	226473500	KIT TECNA GRINDERS	WITH PART.N°4
	226477700	KIT ITAL MILL GRINDERS	WITH PART.N°4
10	128610521	STAINLESS STEEL AISI 304 SPHERE D=5,5MM	
11	126765517	STEEL SPRING SPHERE D=5,5 MOTOR MAGIC	
12	149188750	CONICAL GRIND. SUPP. + RING MAGIC	
13	11001595	ST.STEEL STEAM TUBE AS.SMART	
14	140360200	FELT RING 40X34X5	
15	145895400	INSERT FOR DOSER SMART	
16	146570950	RING NUT FOR GRINDING ADJUSTMENT MAGIC	
17	149194200	GRINDER MOTOR SUPPORT SMART	
18	9141.075.00A	MOTOR MC MIELE WERKS NORME 230V	
	9141.075.00F	MOTOR MC MIELE WERKS NORME 120V	
	9141.075.00R	MOTOR MC MIELE WERKS NORME 100V	
19	128610421	STAIL.STELL AISI 304 SPHERE D=3,2MM	
20	126770117	NEW SPRING SPHERE D=3,2 MOTOR MAGIG	
21	140230400	SHOCK ABS .CONICAL GRINDER SUPP.MAGIC	
22	129914002	SCREW TCB TORX 10 3,5X16 PLAST.ZN-B	
23	U207.004	PLAIN WASHER 4,3X16 UNI 6592 GAL	
24	286883958	GENERAL MOTOR ASSY.SMART	230V
	20000323	GENERAL MOTOR AS.G100 SMART	120V
	20000324	GENERAL MOTOR AS.G100 SMART	100V
25	227431250	BLACK/BLACK PANNARELLO PLASTIC ASSY.	
26	9141.052	COFFEEGRINDER REINFORCING RING	
27	147572150	PLATE FIXING TOOTHED SLIDE SMART	
28	148740550	TOOTHED SLIDE FOR DOSE ADJUST SMART	
29	145851862	GROUND COFFEE OUTLET SEAL SMART	
30	9991.103	ANTIVIBRATION FOR COFFEEGRINDER	
31	147531500	BLACK GRINDER SUPPORT PLATE P107	
	147531518	BLACK GRINDER SUPPORT PLATE P107 JQA	
32	145852560	GROUND COFFEE CONT.SEAL LOWER SMART	J
33	9161.122.150	DOSE ADJUSTMENT LEVER GREY CLASSIC	
34	145895350	BLACK INSERT FOR MOUNT.PLATE SMART	
35	227533000	BOILER SUPPORT PLATE SMART ASSY.	
36	9161.333.050	BLACK BOILER COVER SMART	
37	129535721	SCREW TSP3,5X9,5 DIN 7982 SS	
38	283544900	2POLES CONN.AS.COF.GRIN.JP1 33MH CA	230V
	283544955	2POLES CONN.AS.COF.GRIN.JP1 33MH CA	100V-120V

POS	CODE	DESCRIPTION	NOTE
39	186724200	MICROSWITCH SAIA X3M502K2KAJ32AV	
40	11005343	BLACK FAUCET SUPPORT V2 SMART	
41	12000450	SCREW TCBR TORX 10 3,5X12 PLAST.ZN-N	
42	147756400	PROTECTION FAUCET BODY WATER/STEAM	
43	9161.345.050	BLACK INTERNAL COVERING PUMP SPACE	
44	9161.332.050	BLACK EXTERNAL COVERING PUMP SPACE	
45		**PARTICULAR NOT AVAILABLE**	SEE PART.N°72
46		**PARTICULAR NOT AVAILABLE**	SEE PART.N°72
47		**PARTICULAR NOT AVAILABLE**	SEE PART.N°72
48		**PARTICULAR NOT AVAILABLE**	SEE PART.N°72
49		**PARTICULAR NOT AVAILABLE**	SEE PART.N°72
50		**PARTICULAR NOT AVAILABLE**	SEE PART.N°72
51	289202200	THERMAL.PROTECTOR 100°C	
52	283770658	ELECTROMAGN.SMART ASSY.	230V
	283770755	V2 COFFEE DOSER COIL ASS.	100V-120V
53	9161.041	DOSER ELECTROMAGNET CORE	
54	9161.076.150	DOSER DOOR PIN GREY	
55	126764818	SPRING ELECTROM.BEAN DOSER MAGIC	
56	U701.003	SNAP RING 7 UNI 7434	
57	9161.074.150	DOSER DOOR GREY	
58	9161.048	SCRAPER ROD	
59	129913902	SCREW TCB TORX 10 3X12 PLAST.ZN-B	
60	NE05.017	MICROSWITCH	
61	149185959	BEAN DOSER MICRO SUPORT MAGIC	
62	148700559	COFFEE DOSER DOSE ADJ. SEL. GR MAG	
63	227700541	STEAM KNOB SMART SILVER	
	227700550	STEAM KNOB SMART BLACK	
64		**PARTICULAR NOT AVAILABLE**	SEE PART.N°72
65		**PARTICULAR NOT AVAILABLE**	SEE PART.N°72
66	NF11.052	OETIKER CLIP	
67	126772018	SPRING DI=7,5 FOR FABRIC FINISH TUB	
68	JS01.019	BRAIDED SILICON TUBE 3X7	IN ROLL
69	128310402	GALV.WASHER UNI 8842 A4	
70	140328059	OR 2015 IN SILICONE PTFE/FDA	
71	9011.144	SS FORK FOR TUBE D=4	
72	20007014	KIT AS.RUB.VAP.SMART	COMPLETE
73	11004183	BLACK BREW UNIT NEW P107	
		SEE EXP.CODE E90052 NEXT PAGE	
		NOTE:FOR SINGLE PARTS OF OLD GREY BREW UNIT:SEE EXP.CODE E90029 LAST PAGE	

Щоб переглянути та придбати необхідну запчастину, натисніть на її номер на малюнку, або на її номер, назву у таблиці з позначкою

Esp. E90052 Rev.03

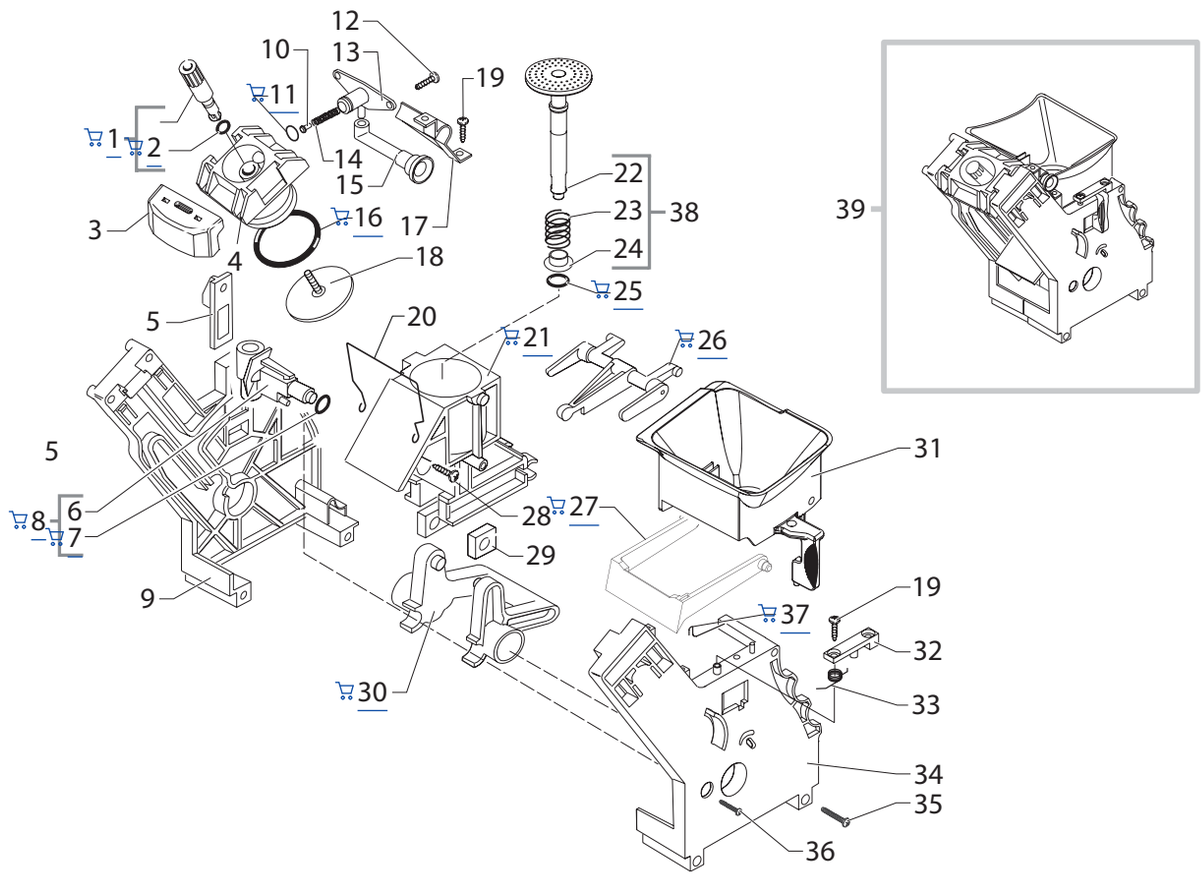

Saeco INTERNATIONAL GROUP

SUP. 021

Cod. 11004183

POS	CODICE	DESCRIZIONE	NOTE
01	227470150	AS.PERNO X DOCCIA COMPLETO NERO	
02	NM02.006	OR R5 TERMOIL	
03	11000197	PROTEZIONE X SCHIZZI GRUPPO CAFF. SMART	
04	11003428	CONTROPISTONE X GRUPPO CAF.SMART NERO	
05	9161.373.050	PIASTRINA AGGANCIO GRUP.CAF.SMART NERO	
06	9161.064.050	MANICOTTO ENTRATA ACQUA GRUP.CAFF.NERO	
07	NM02.007	OR 2025 TERMOIL	
08	20000440	GRUPPO RICAMBIO MANICOTTO NERO	
09	9161.375.050	PIASTRA POSTERIORE GRUPPO SMART NERO	
10	149452700	VALVOLA CIECA X GRUPPO CAFFE' NERO	
11	140328761	OR METRICO 0060-15 IN TERMOIL	
12	129910921	VITE TCB 3X10 PLAST.INOX	
13	9161.377.050	TAPPO VALVOLA GRUPPO SMART NERO	
14	126771918	MOLLA X CONTROPISTONE GRUPPO SMART	
15	9161.372	RACCORDO EROG.GRUPPO CAFF.SMART NERO	
16	NM01.044	OR ORM 0320-40 IN SILICONE PTFE/FDA	
17	9161.371.050	FERMO RACCORDO EROG.GRUP.SMART NERO	
18	9160.075	AS.DOCCIA DE=35,8 ELFO C/VITE E DADO	
19	12000895	VITE TSP 3X10 PLAST.INOX	
20	11001556	MOLLA RASATORE H=49 X GRUPPO CAF.SMART	
21	11003075	AS.CONT.CAF.C/BOCC.SALD.GRUP.P124 8G.NER	CON PART. N°25
22	11003077	AS.PISTONE INTEGRALE GRUP.P124 8GR.NERO	
23	9161.198	MOLLA PISTONE GRUPPO CAFFE' M5000	
24	9161.191	BOCCOLA PISTONE GRUP.CAFF.M5000 NEUTRO	
25	NM02.018	OR METRICO 0090-25 IN TERMOIL	
26	11003078	BIELLA X GRUPPO P124 8GR.NERO	
27	11004161	RASATORE X GRUPPO CAFFE' NERO	
28	129912521	VITE TCBR 3,5X14 PLAST.INOX	
29	9161.094.050	BLOCCHETTO FORATO GRUP.CAFFE' PA/NERO	
30	9161.066.050	ALBERO A GOMITO X GRUPPO NERO	
31	11003786	TRAMOGGIA GRUPPO CAFFE' V2 SMART NERO	
32	9161.374.050	PIASTRA FISS.TRAMOG.GRUP.CAF.SMART NERO	
33	9161.378	MOLLA TRAMOGGIA GRUPPO CAFFE' SMART	
34	11005920	PIASTRA ANT.GRUPPO SMART S/F.NER.SER.NEW	
35	12000897	VITE TCB 3,5X20 PLAST.INOX	
36	12000550	VITE TCB 3X25 PLAST.INOX	
37	9161.046	MOLLA X RASATORE GRUPPO	
38	11023086	AS.GEN.PISTONE INTEGR.GRUP.CAF.8GR.NER.	
39	11004183	GRUPPO CAFFE' P107/NEW NERO	

POS	CODE	DESCRIPTION	NOTE
01	227470150	PIN BLACK ASS.FOR PERCOLATOR	
02	NM02.006	OR R5 TERMOIL	
03	11000197	PROTECTION FOR BREW UNIT SMART	
04	11003428	BLACK COUNTERPISTON FOR SMART COF.UNIT	
05	9161.373.050	BLACK COUPLING PLATE BREW UNIT SMART	
06	9161.064.050	BLACK WATER INLET SLEEVE BREW UNIT	
07	NM02.007	OR 2025 TERMOIL	
08	20000440	BLACK SPARE SLEEVE UNIT	
09	9161.375.050	BLACK REAR PLATE FOR BREW UNIT SMART	
10	149452700	BLACK BLIND VALVE FOR BREW UNIT	
11	140328761	OR METRIC 0060-15 IN TERMOIL	
12	129910921	SCREW TCB TORX 10 3X10 SS	
13	9161.377.050	BLACK VALVE CAP FOR BREW UNIT SMART	
14	126771918	SPRING FOR CONTERPISTON UNIT SMART	
15	9161.372	BLACK BREWING PIPE COFFEE GROUP SMART	
16	NM01.044	OR ORM 0320-40 IN SILICONE PTFE/FDA	
17	9161.371.050	BLACK BREWING PIPE LOCK BREW UNIT SMART	
18	9160.075	PERCOLATOR DE=35,8 ELFO ASSY.	
19	12000895	SCREW TSP TORX 10 3X10 PLAST.SS	
20	11001556	SPRING H=49 FOR COFFEE BREW UNIT SMART	
21	11003075	BLACK COFFEE CONTAINER BREW UNIT P124	WITH PART. N°25
22	11003077	BLACK INTEGRAL PISTON UNIT P124 8GR.ASS	
23	9161.198	PISTON SPRING BREW UNIT M5000	
24	9161.191	NEUTRAL PISTON BUSH BREW UNIT M5000	
25	NM02.018	OR ORM 0090-25 TERMOIL	
26	11003078	BLACK CONNECTING ROD FOR UNIT P124 8GR.	
27	11004161	BLACK SCRAPER FOR COFFEE UNIT	
28	129912521	SCREW TCBR TORX 10 3,5X14 PLAST.SS	
29	9161.094.050	BLACK DRILLED BLOCK BREW UNIT	
30	9161.066.050	ELBOW SHAFT FOR UNIT BLACK	
31	11003786	BLACK HOPPER DOSER BREW UNIT V2 SMART	
32	9161.374.050	BLACK HOPPER BLOCKING PLATE UNIT SMART	
33	9161.378	SPRING HOPPER SMART BREW UNIT	
34	11005920	BLACK FRONT PLATE BREW UNIT SMART S.SCR.	
35	12000897	SCREW TCB TORX 10 3,5X20 PLAST.SS	
36	12000550	SCREW TCB TORX 10 3X25 PLAST.SS	
37	9161.046	SPRING FOR UNIT SCRAPER	
38	11023086	BLK 8GR.BREW UNIT NTEGR.PISTON GEN.AS	
39	11004183	BLACK BREW UNIT NEW P107	

Щоб переглянути та придбати необхідну запчастину, натисніть на її номер на малюнку, або на її номер, назву у таблиці з позначкою

Esp. E90029 Rev.04

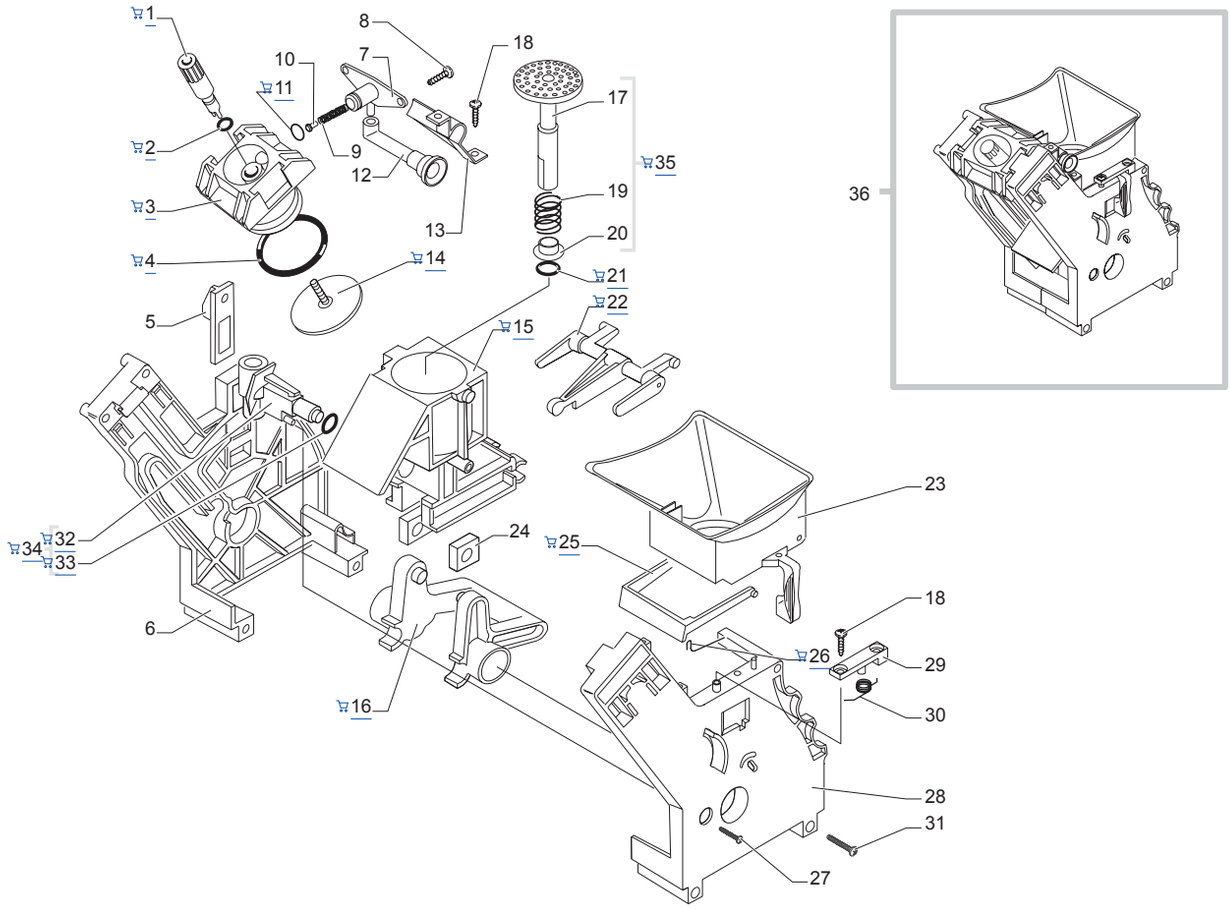

Saeco® GRUPPO CAFFE' X C.A. SUP 021

Cod. 9160.070.150
Cod. 9160.074.150

POS	CODICE	DESCRIZIONE	NOTE
01	227470159	AS.PERNO X DOCCIA COMPLETO GRIGIO	I
	227470150	AS.PERNO X DOCCIA COMPLETO NERO	ALTRI PAESI
02	NM02.006	OR R5 TERMOIL	
03	9161.369.150	CONTROPISTONE X GRUPPO CAFF.SMART GRIG	
04	NM01.044	OR ORM 0320-40 SILICONE PTFE/FDA	
05	9161.373.150	PIASTRINA AGGANCIO GRUPPO SMART GRI	
06	9161.375.150	PIASTRA POSTERIORE GRUPPO SMART GRIGIO	
07	9161.377.150	TAPPO VALVOLA GRUPPO SMART GRIGIO	
08	129910921	VITE HI-LO TC 3X10 INOX	
09	126771918	MOLLA X CONTROPISTONE GRUPPO SMART	
10	149452700	VALVOLA CIECA X GRUPPO CAFFE'	
11	140328761	OR METRICO 0060-15 IN TERMOIL	
12	9161.372	RACCORDO EROGAZ.GRUPPO CAF.SMART NERO	
13	9161.371.150	FERMO RACCORDO EROG.GRUP.SMART GRIG	
14	223740300	AS.DOCCIA DE=35,8 C/VITE E DADO	I
	11009162	DOCCIA D=35,8 276FORI C/VITE M3x20 LUCID	ALTRI PAESI
15	9161.195.150	CONTENITORE COMPL.X GRUPPO GRIGIO	
16	322003859	ALBERO A GOMITO GRIG.X GRUPPO MAGIC	I
	9161.066.150	ALBERO A GOMITO X GRUPPO GRIGIO	ALTRI PAESI
17	9161.306.150	ASS.PISTONE INTEGRALE GRIGIO	
18	U109.028	VITE AUT.TCB 2,9X9,5 DIN 7981 C INOX	
19	9161.198	MOLLA X PISTONE	
20	9161.191	BOCCOLA X PISTONE NEUTRO	
21	NM02.018	OR METRICO 0090-25 IN TERMOIL	
22	9161.065.150	BIELLA X GRUPPO GRIGIO	
23	149261159	TRAMOGGIA X GRUPPO CAFFE'SMART/V2 GRIGIA	
24	9161.094.050	BLOCCHETTO FORATO X GRUPPO NERO	
25	322004059	RASATORE GRIGIO X GRUPPO MAGIC	I
	9161.060.150	RASATORE X GRUPPO CAFFE' GRIGIO	ALTRI PAESI
26	126834518	MOLLA X RASCHIATORE GRUPPO MAGIC	I
	9161.046	MOLLA X RASATORE GRUPPO	ALTRI PAESI
27	U109.027	VITE AUT.TCB 2,9X19 DIN 7981 C INOX	
28	9161.376.150	PIASTRA ANT.GRUPPO SMART S/FORO GRIGIA	
29	9161.374.150	PIASTRA FISSAG.TRAMOG.GRUPPO SMART GRIG	
30	9161.378	MOLLA TRAMOGGIA GRUPPO SMART	
31	U109.026	VITE AUT.TCB 3,5X19 DIN 7981 C INOX	
32	322003659	MANICOT.GRI.ENTRAT.ACQUA GRUP.MAGIC	I
	9161.064.150	MANICOTTO ENTRATA ACQUA GRIGIO	ALTRI PAESI
33	NM02.007	OR 2025 TERMOIL	
34	0301.R04.150	GRUPPO RICAMBIO MANICOTTO GRIGIO	
35	9161.343.150	ASS.PISTONE INTEGRALE	
36	9160.070.150	GRUPPO CAFFE' SMART S/FORO GRIGIO	I
	9160.074.150	GRUPPO CAFFE' SMART/ELFO S/FORO GRIGIO	ALTRI PAESI

POS	CODE	DESCRIPTION	NOTE
01	227470159	PIN GREY ASS.FOR PERCOLATOR	I
	227470150	PIN BLACK ASS.FOR PERCOLATOR	OTHER COUNTRY
02	NM02.006	OR R5 TERMOIL	
03	9161.369.150	GREY COUNTERPISTON FOR SMART COFFEE UNIT	
04	NM01.044	OR ORM 0320-40 SILICONE PTFE/FDA	
05	9161.373.150	COUPLING PLATE BREW UNIT SMART	
06	9161.375.150	GREY REAR PLATE FOR BREW UNIT SMART	
07	9161.377.150	VALVE CAP FOR BREW UNIT SMART	
08	129910921	HI-LO TC SCREW 3X10 STEEL	
09	126771918	SPRING FOR CONTERPISTON UNIT SMART	
10	149452700	BLIND VALVE FOR UNIT	
11	140328761	OR METRIC 0060-15 IN TERMOIL	
12	9161.372	BLACK BREWING PIPE COFFEE GROUP SMART	
13	9161.371.150	BREWING PIPE LOCK BREW UNIT SMART	
14	223740300	PERCOLATOR DE=35,8 ASSY.	I
	11009162	SHINE PERCOL.D=35,8 276HOL.W/SCREW M3x20	OTHER COUNTRY
15	9161.195.150	COMPLETE CONTAINER FOR UNIT GREY	
16	322003859	ELBOW SHAFT GREY FOR MAGIC UNIT	I
	9161.066.150	ELBOW SHAFT FOR UNIT GREY	OTHER COUNTRY
17	9161.306.150	INTEGRAL PISTON ASS.GREY	
18	U109.028	SCREW AUT.TCB 2,9X9,5 DIN 7981 C	
19	9161.198	SPRING FOR PISTON	
20	9161.191	BUSH FOR PISTON NEUTRAL	
21	NM02.018	OR ORM 0090-25 TERMOIL	
22	9161.065.150	CONNECTING ROD FOR UNIT GREY	
23	149261159	GREY HOPPER DOSER BREW UNIT SMART/V2	
24	9161.094.050	DRILLED BLACK BLOCK FOR UNIT	
25	322004059	SCRAPER FOR MAGIC BREW UNIT	I
	9161.060.150	GREY SCRAPER FOR COFFEE UNIT	OTHER COUNTRY
26	126834518	SPRING FOR SCRAPER UNIT MAGIC	I
	9161.046	SPRING FOR UNIT SCRAPER	OTHER COUNTRY
27	U109.027	SS.SCREW AUT.TCB 2,9X19 DIN 7981 C	
28	9161.376.150	GREY FRONT PLATE FOR BREW UNIT SMART	
29	9161.374.150	GREY HOPPER BLOCKING PLATE UNIT SMART	
30	9161.378	SPRING HOPPER SMART GROUP	
31	U109.026	SS.SCREW AUT.TCB 3,5X19 DIN 7981 C	
32	322003659	WATER INLET SLEEVE GREY MAGIC UNIT	I
	9161.064.150	WATER INLET SLEEVE GREY	OTHER COUNTRY
33	NM02.007	OR 2025 TERMOIL	
34	0301.R04.150	SPARE SLEEVE UNIT GREY	
35	9161.343.150	INTERGRAL PISTON ASS.	
36	9160.070.150	GREY BREW UNIT SMART	I
	9160.074.150	GREY BREW UNIT SMART/ELFO	OTHER COUNTRY