Щоб переглянути та придбати необхідну запчастину, натисніть на її номер на малюнку, або на її номер, назву у таблиці з позначкою

Coffee Machine

HD8833
SUP037R

Service
Service
Service

Exploded View

Contents **Table**

External / Electronical components	1/5
Front panel/User interf./Coffee. disp.	2/5
Water system with slim boiler	3/5
Coffee grinder assembly	4/5
Gear motor / Brewing unit	5/5

All rights reserved. No part of this publication may be reproduced, stored in a retrieval system or transmitted, in any form or by any means, electronic, mechanical, photocopying, or otherwise without the prior permission of Saeco.

Published by Saeco International Group Subject to modification EN 4219 400 00005.4
2012-Oct-22

PHILIPS
Saeco

Щоб переглянути та придбати необхідну запчастину, натисніть на її номер на малюнку, або на її номер, назву у таблиці з позначкою 🛒

Exp. E74157 Rev.04 - 22/10/12

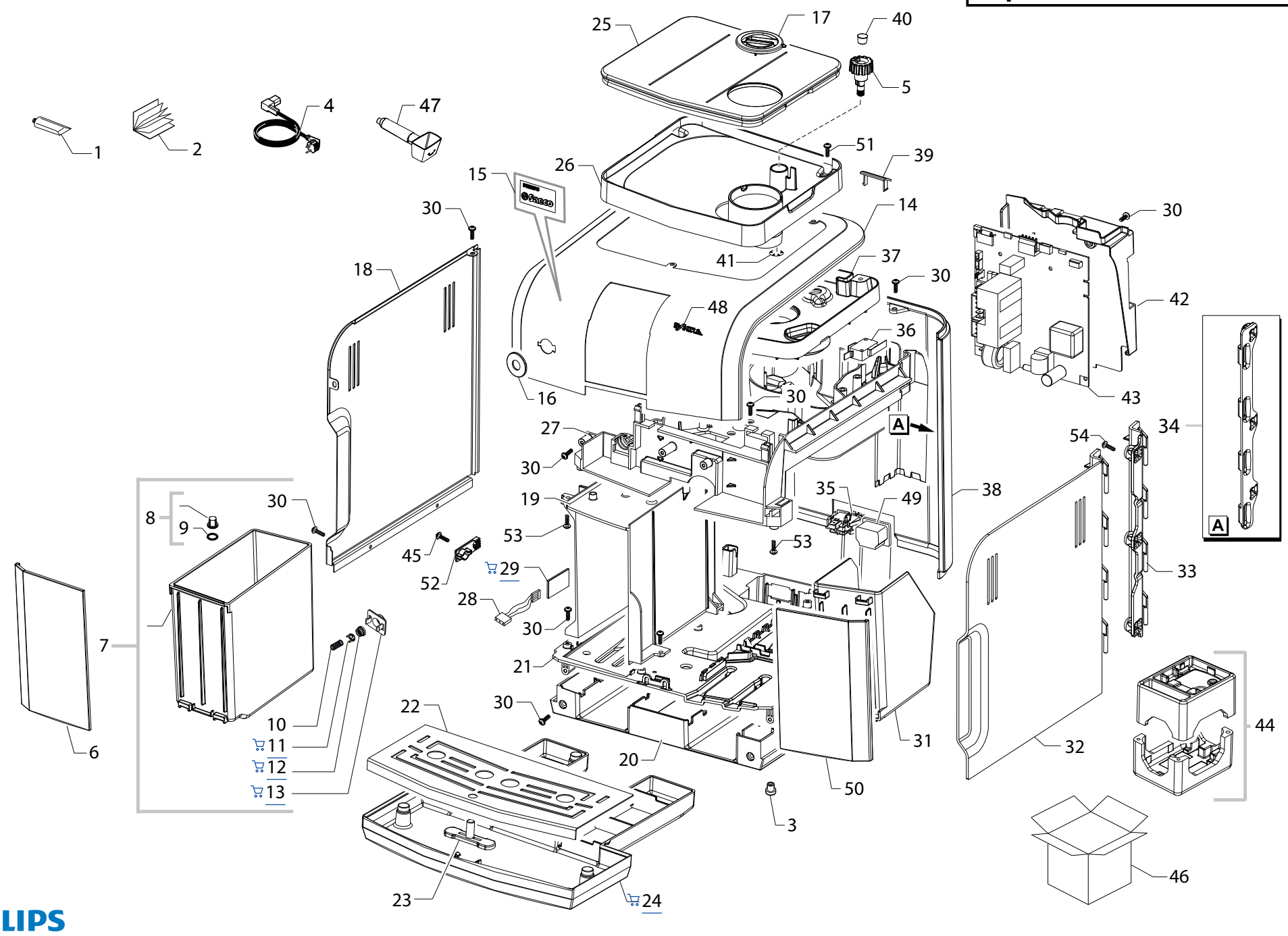

PHILIPS

Saeco

HD8833/11-12-13-14-15-16

HD8833/18-19-31-39-47

CE

Cod.10003553-3554-3555-3556-3557-3558

Cod.10003614-3765-3826-3827-3889

POS	CODE	12NC	DESCRIPTION	NOTE
01	11028379	996530070318	PSA KLUBER TRIBOSTAR SIL 2 TUBE 5GR.	
02	15002479	996530067442	MANUAL PSA HD8833 XSM/P IT	
	15002520	996530067424	MANUAL PSA HD8833 XSM/P GB	
	15002521	996530067431	MANUAL PSA HD8833 XSM/P DE	
	15002522	996530067422	MANUAL PSA HD8833 XSM/P FR	
	15002523	996530067407	MANUAL PSA HD8833 XSM/P ES	
	15002524	996530067415	MANUAL PSA HD8833 XSM/P PT	
	15002525	996530067432	MANUAL PSA HD8833 XSM/P NL	
	15002526	996530067426	MANUAL PSA HD8833 XSM/P SV	
	15002527	996530067435	MANUAL PSA HD8833 XSM/P NO	
	15002529	996530067404	MANUAL PSA HD8833 XSM/P DA	
	15002536	996530067405	MANUAL PSA HD8833 XSM/P UA	
	15002542	996530067408	MANUAL PSA HD8833 XSM/P CHN	
	15002535	996530067409	MANUAL PSA HD8833 XSM/P SK	
	15002544	996530067412	MANUAL PSA HD8833 XSM/P TWN	
	15002537	996530067413	MANUAL PSA HD8833 XSM/P SL	
	15002530	996530067414	MANUAL PSA HD8833 XSM/P GR	
	15002528	996530067416	MANUAL PSA HD8833 XSM/P FI	
	15002543	996530067417	MANUAL PSA HD8833 XSM/P KOR	
	15002531	996530067421	MANUAL PSA HD8833 XSM/P PL	
	15002538	996530067425	MANUAL PSA HD8833 XSM/P RO	
	15002532	996530067428	MANUAL PSA HD8833 XSM/P RU	
	15002539	996530067429	MANUAL PSA HD8833 XSM/P CR	
	15002534	996530067438	MANUAL PSA HD8833 XSM/P CS	
	15002540	996530067441	MANUAL PSA HD8833 XSM/P BG	
	15002541	996530067443	MANUAL PSA HD8833 XSM/P SR	
	15002533	996530067445	MANUAL PSA HD8833 XSM/P HU	
	15002739	996530072977	MANUAL PSA HD8833 XSM/P SA	
03	147622800	996530016875	TRANSPARENT SILICONE FOOT	
04	11004246	996530002166	BLACK POWER CABLE TAIWAN HVCTF L=1200	
	11004247	996530002167	BLACK POWER CABLE RVV 3X1 CHINA L=1200	
	11001985	996530001089	BLACK POWER CABLE KOREA L=1200	
	183911050	996530025808	BLACK POWER CABLE SCHUKO L=1200	
	183940650	996530025872	BLACK POWER CABLE AUSTRALIA L=1200	
	183970350	996530025882	BLACK POWER CABLE UK L=1200	
	183921950	996530025843	POWER CABLE SJT3 USA BLACK UL L=1200	
05	11013206	996530006689	BLACK GRIND.ADJUSTMENT KNOB XSM	

POS	CODE	12NC	DESCRIPTION	NOTE
06	11023345	996530007617	BLACK WATER TANK COVER XSM ASSY.	BLACK
06	11026059	996530068201	BLU WATER TANK COVER XSM ASSY.	BLUE
07	11013093	996530006619	NAT/GREY WATER CONTAINER XSM ASSY.	
08	224640200	996530029115	WHITE WATER CONTAINER EXT.FILTER ASSY.	WITH PART.N°09
09	140328461	996530013571	OR ORM 0190-10 EPDM	
10	11003672	996530001831	SS SPRING FOR WATER CONTAIN.VALVE P0049	
11	11003673	996530001832	GREY WATER CONTAINER VALVE INSERT P0049	
12	11003671	996530001829	TRANSP.VALVE FOR WATER CONTAINER P0049	
13	11001298	996530000733	BLACK LID FOR DUCKBILL VALVE P0049	
14	11023341	996530007616	BLACK UPPER CASING COVER XSM/P ASSY.	BLACK
	11025998	996530068198	BLUE UPPER CASING COVER XSM/P ASSY.	BLUE
15	11025026	996530068191	ADHES.SILVER PLATE LOGO PHILIPS-SAECO	
16	11012921	996530006572	CHROMED UPPER COVER CASING CAP XSM	
			UP TO S/N TU901128095109	
	11027486	996530069616	CHROM.UPPER COVER CASING CAP V2 XSM	
			FROM S/N TU901128095110	
17	11013102	996530006624	NAT/GREY GROUND COFFEE HOPPER LID XSM	
18	11013107	996530006626	BLACK CASING LEFT SIDE XSM	BLACK
	11021374	996530007091	WHITE CASING LEFT SIDE XSM	WHITE
19	11012708	996530006489	BLACK CASING BOTTOM INSERT XSM	
20	11012681	996530006464	BLACK CASING BOTTOM COVER XSM	BLACK
	11013471	996530006786	WHITE CASING BOTTOM COVER XSM	WHITE
21	17000432	996530066739	BLACK CASING BOTTOM XSMC	
22	11012706	996530006487	SS GRATE FOR DRIP TRAY XSM	
23	11013184	996530006683	RED FLOAT FOR DRIP TRAY XSM	
24	11013229	996530006704	BLACK DRIP TRAY XSM ASSY.	BLACK
	11021857	996530007162	WHITE DRIP TRAY XSM ASSY.	WHITE
25	11012725	996530006505	NAT/GREY BEAN COFFEE CONTAINER LID XSM	
26	11012724	996530006504	NAT/GREY BEAN CONTAINER XSM	
27	11012642	996530006446	BLACK COFFEEGRINDER PLATE XSM	
28	11013709	996530006833	3POLES CONNECTOR WATER LEVEL XSM UL	
29	11003232	996530001522	AS.CPU+SW WATER LEVEL SENSOR V2	
30	12000450	996530007819	SCREW TCBR TORX 10 3,5X12 PLAST.ZN-N	
31	11012709	996530006491	BLACK DUMP BOX XSM	
32	11013161	996530006667	BLACK DOOR RIGHT SIDE XSM ASSY.	BLACK
	11022260	996530007285	WHITE DOOR RIGHT SIDE XSM ASSY.	WHITE
33	11012713	996530006494	BLACK HINGE FOR DOOR RIGHT SIDE XSM	

PSA SYNTIA FOCUS

TABLE 1a/5

Щоб переглянути та придбати необхідну запчастину, натисніть на її номер на малюнку, або на її номер, назву у таблиці з позначкою 🛒

Exp. E74157 Rev.04 - 22/10/12

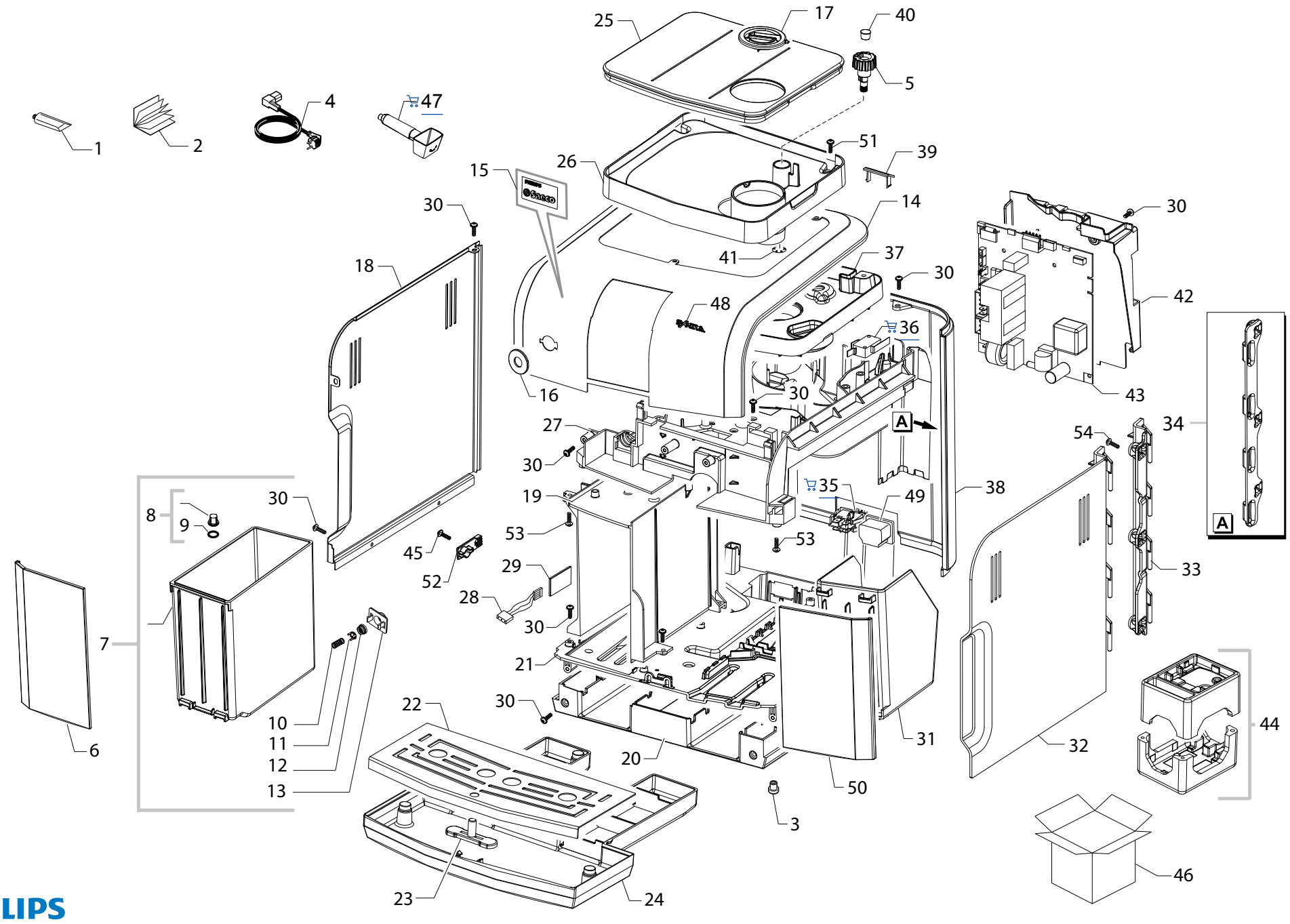

PHILIPS

Saeco

HD8833/11-12-13-14-15-16

HD8833/18-19-31-39-47

CE

Cod.10003553-3554-3555-3556-3557-3558

Cod.10003614-3765-3826-3827-3889

POS	CODE	12NC	DESCRIPTION	NOTE
34	11012714	996530006495	BLACK HINGE FOR REAR CASING XSM	
35	NE03.038	996530058836	BIPOLAR SWITCH FUSIT C1250AR	
36	NE05.013	996530058847	MICROSWITCH SAIA XGK52-81-J23	
37	11012719	996530006498	COFFEE GRINDER SOUNDPROOFING COVER XSM	
38	11013104	996530006625	BLACK REAR CASING XSM	BLACK
	11013600	996530006817	WHITE REAR CASING XSM	WHITE
39	11013704	996530006832	TRANSP.COVER INFRAREDS ACCESS XSM	
40	149213000	996530018115	TRANSP.CAP FOR KNOBS BEAN CONTAINER	
41	120350604	996530010768	SHAFT 6 UNI 7434	
42	11012301	996530006364	BLACK PWR/CPU BOARD PROTECTION P0057	
43	11027925	996530071874	AS.CPU+SW XSM SLIM 230V	230V
	11026608	996530067857	AS.CPU+SW XSM/H V3 120V	120V
44	20006885	996530067444	KIT PS-E INSERT FOR BOX XSM	
45	129913202	996530013156	SCREW TCB TORX 10 3X8 PLAST.ZN-B	
46	13001280	996530067423	DISPLAY BOX XSM/P PSA SYNTIA FOCUS WE	
	13001281	996530067418	DISPLAY BOX XSM/P PSA SYNTIA FOCUS CEE	
	13001373	996530070018	DISPLAY BOX XSM/P PSA SYNTIA FOCUS USA	
47	146680850	996530016529	BLACK COFFEE MEASURE SMART	
48	11022065	996530007228	ADHES.SILVER PLATE LOGO SYNTIA	
49	12000280	996530007788	CUP SOCKET EN 60320 C 13	
	12001645	996530069782	CUP SOCKET V2 EN 60320 C 13	USA UL
50	11023346	996530007618	BLACK DUMP BOX COVER XSM ASSY.	BLACK
	11025997	996530068199	BLUE DUMP BOX COVER XSM ASSY.	BLUE
51	129912504	996530013147	SCREW TCBR TORX 10 3,5X14 PLAST.ZN-N	
52	17000064	996530067437	BLK CAPACIT.SENSOR DEADLOCK INSERT XSM	
53	129912521	996530013148	SCREW TCBR TORX 10 3,5X14 PLAST.SS	
54	12001728	996530070321	SCREW TCBR TORX 10 3,5X12 PLAST.SS	

POS	CODE	12NC	DESCRIPTION	NOTE

PSA SYNTIA FOCUS

TABLE 1b/5

Щоб переглянути та придбати необхідну запчастину, натисніть на її номер на малюнку, або на її номер, назву у таблиці з позначкою 🛒

Exp. E74157 Rev.04 - 22/10/12

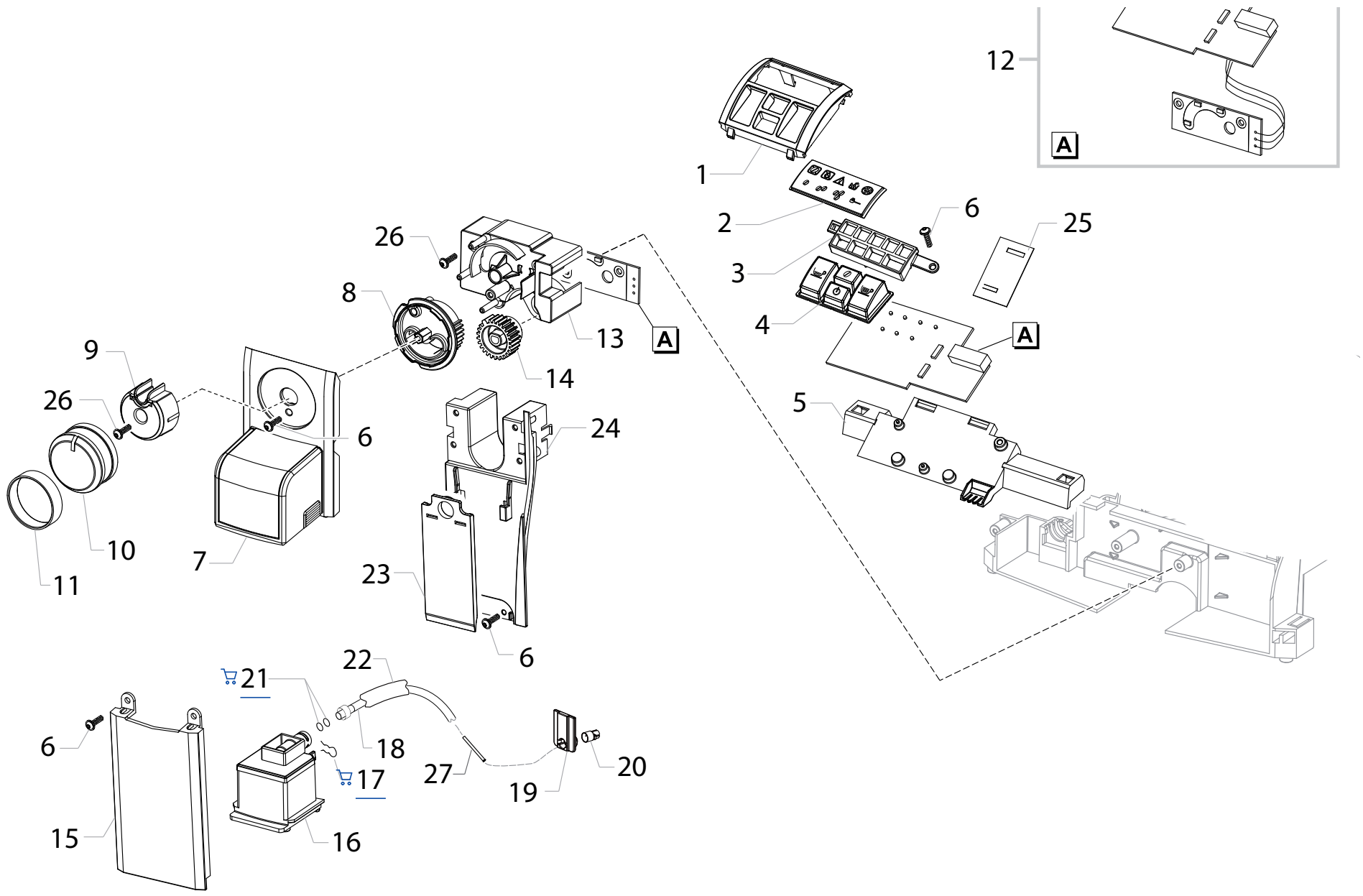

PHILIPS

Saeco

HD8833/11-12-13-14-15-16

HD8833/18-19-31-39-47

CE

Cod.10003553-3554-3555-3556-3557-3558

Cod.10003614-3765-3826-3827-3889

POS	CODE	12NC	DESCRIPTION	NOTE
01	11022826	996530007458	CHROMED DISPLAY FRAME XSM/P	
02	11013523	996530006798	TRANSP.GLASS FOR DISPLAY XSM/P	
03	11022837	996530007462	BLACK GUIDE LIGHT SUPPORT XSM/P	
04	11022824	996530007457	SILVER TOUCH PANEL S/SCREEN XSM/P	
05	11013526	996530006799	BLACK DISPLAY SUPPORT XSM/P	
06	12000450	996530007819	SCREW TCBR TORX 10 3,5X12 PLAST.ZN-N	
07	11021760	996530007135	CHROM.COFF.DISPENSER SUPP.S/SCR.XSM ASSY	
08	11013117	996530006632	BLACK CONTROL KNOB SUPPORT XSM ASSY.	
09	11012701	996530006483	BLACK CONTROL KNOB XSM	
10	11013091	996530006617	CHROM.CONTROL KNOB COVER XSM/H	
11	11021454	996530007105	BLACK CONTROL KNOB COVER INSERT XSM	
12	11013423	996530006771	INTERFACE LED BOARDS+UL CABL.XSM/P ASSY.	
13	11012704	996530006486	BLACK KNOB ELECTR.BOARD SUPPORT XSM	
14	11004120	996530002059	WHITE STEAM/WATER GEAR Z=26 P0057	
15	11013096	996530006621	CHROM.FRONT PLATE XSM	
16	11013070	996530006603	BLACK COFFEE DISPENSER XSM ASSY.	
🛒 17	9011.144	996530048885	SS FORK FOR TUBE D=4	
18	11004132	996530002073	TEFLON TUBE 2X4 L=250 MM ASSY.	
19	11005100	996530002748	PLATE FOR BUSH TEFLON TUBE 2X4 P124	
20	11005101	996530002749	BLACK BUSH FOR TEFLON TUBE 2X4 P124	
🛒 21	140328059	996530013564	OR 2015 SILICONE PTFE/FDA	
22	149361200	996530018278	BLACK SILICONE TUBE 7,5X9,3 IN ROLL	IN ROLL
23	11013411	996530006765	BLACK COF.DISPENSER MOBILE PART SUPP.XSM	
24	11012707	996530006488	BLACK FRONT PANEL SUPPORT XSM	
25	17000445	996530009608	BLACK KYB-LED BOARD PROTECTION XSM/P	
26	129912504	996530013147	SCREW TCBR TORX 10 3,5X14 PLAST.ZN-N	
27	17000266	996530071774	SS.L=22,6MM INT.BUSH FOR TEFLON TUBE D4	

POS	CODE	12NC	DESCRIPTION	NOTE

PSA SYNTIA FOCUS

TABLE 2/5

Щоб переглянути та придбати необхідну запчастину, натисніть на її номер на малюнку, або на її номер, назву у таблиці з позначкою 🛒

Exp. E74157 Rev.04 - 22/10/12

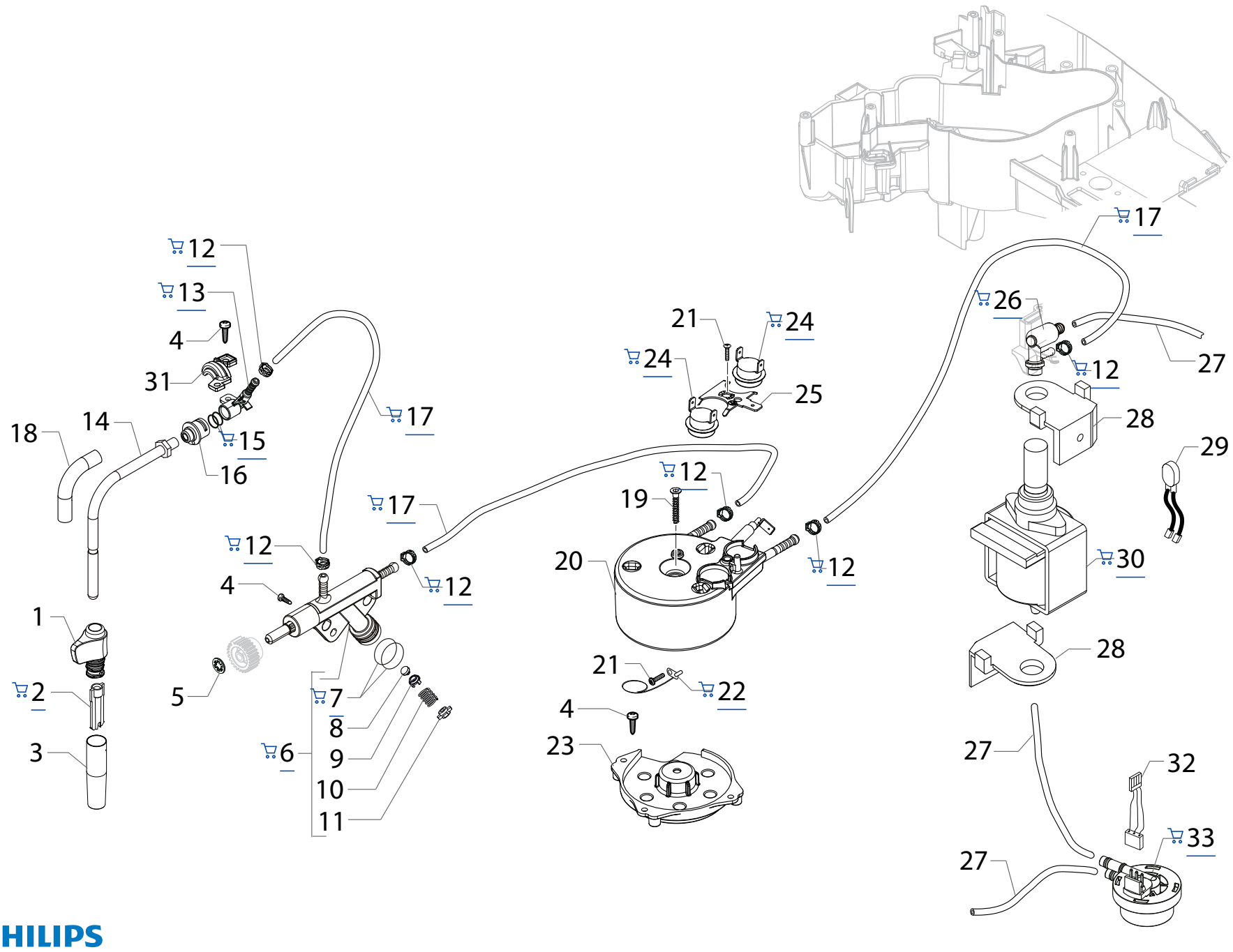

PHILIPS

Saeco

HD8833/11-12-13-14-15-16

HD8833/18-19-31-39-47

CE

Cod.10003553-3554-3555-3556-3557-3558

Cod.10003614-3765-3826-3827-3889

	POS	CODE	12NC	DESCRIPTION	NOTE
	01	11007194	996530004127	BLACK STEAM TUBE HANDGRIP G0053	
🛒	02	11001620	996530000925	BLACK PANNARELLO INNER TUBE P0049	
	03	11001621	996530000926	SS PANNARELLO COVER P0049	
	04	12000450	996530007819	SCREW TCBR TORX 10 3,5X12 PLAST.ZN-N	
	05	128210600	996530012336	ELASTIC WASHER FOR SHAFT D=6MM	
🛒	06	11012381	996530006383	FLOW SELECTOR FAUCET V2 P0057	
🛒	07	12000893	996530007948	OR ORM 0120-20 BLACK EPDM	
	08	11008104	996530004722	MUSHROOM VALVE FOR FLOW SELECTOR P0057	
	09	11008105	996530004723	FLOW SELECTOR VALVE SUPPORT P0057	
	10	11008077	996530004709	STEEL FLOW SELECTOR VALVE SPRING P0057	
	11	11008106	996530004724	FLOW SELECTOR VALVE CAP P0057	
🛒	12	12000892	996530007947	OETIKER CLAMP D=9,5 16700004	
🛒	13	11005757	996530003103	STEAM TUBE SUPPORT P0057	
	14	11013637	996530006824	TF/CHROM.STEAM TUBE XSM ASSY.	
🛒	15	140324461	996530013509	OR ORM 0060-20 TERMOIL	
	16	11011127	996530005979	BLACK PA6 BUSH FOR STEAM TUBE P0057	
🛒	17	16000380	996530009505	5X8,9 SILICONE TUBE IN ROLL	IN ROLL
	18	11012923	996530006574	CHROM.STEAM TUBE PROTECTION XSM	
				FINO A MATR.TU901128095109	
	19	12001369	996530008039	SCREW TSP TORX 10 5X35 PLAST.SS	
	20	11013735	996530006841	SLIM TUB.BOILER 1300W 230V ASSY.	230V-1300W
		11023153	996530007586	SLIM TUB.BOILER 1300W 120V ASSY.	120V-1300W
	21	12001715	996530069758	SCREW TCB TORX 20 M4X8 AUTOFORMING ZN-B	
🛒	22	190800100	996530026997	TEMPERATURE SENSOR NTC UL L=280MM	
	23	11022791	996530007442	BLACK SLIM/EXSL TUB.BOILER SUPPORT	
🛒	24	12001033	996530007973	THERMOSTAT ONE SHOT 190°	
	25	11001751	996530000997	TUB.BOILER V3 UPPER THERM.FIXING SPRING	
🛒	26	11004689	996530002484	TEA/BRASS SAFETY VALVE 16-18 BAR ASSY.	
	27	JS01.022	996530057357	SILICONE TUBE 5X10 60SH IN ROLL	IN ROLL
	28	149205850	996530018056	BLACK TYPE ULKA PUMP W/BEVEL SUPPORT	
	29	11009747	996530005496	2POLES CONNECTOR PUMP P0057 UL	
	30	12000140	996530007753	ULKA PUMP EP5/S GW 230V-50HZ	230V-50HZ
		12000182	996530007782	ULKA PUMP EP5/S GW 220V-60HZ	220V-60HZ
🛒		12000142	996530007754	ULKA PUMP EAP5/S 120V-60HZ	120V-60HZ
	31	11013894	996530006914	BLACK FORK FOR STEAM TUBE GXSM	
	32	11005948	996530003241	3POLES CONNECTOR FLOWMETER P0057	
🛒	33	NV99.099	996530059843	TURBINE D=1,2 932-8521/00 ASSY.	

POS	CODE	12NC	DESCRIPTION	NOTE
100	11026683	996530069759	SLIM TUB.BOIL.STD C1 T190° 1300W 230V AS	230V-1300W
101	11026684	996530069761	SLIM TUB.BOIL.STD C1 T190° 1300W 120V AS	120V-1300W
			WITH PART.N°20-21-22-24-25	

PSA SYNTIA FOCUS

TABLE 3/5

Щоб переглянути та придбати необхідну запчастину, натисніть на її номер на малюнку, або на її номер, назву у таблиці з позначкою 🛒

Exp. E74157 Rev.04 - 22/10/12

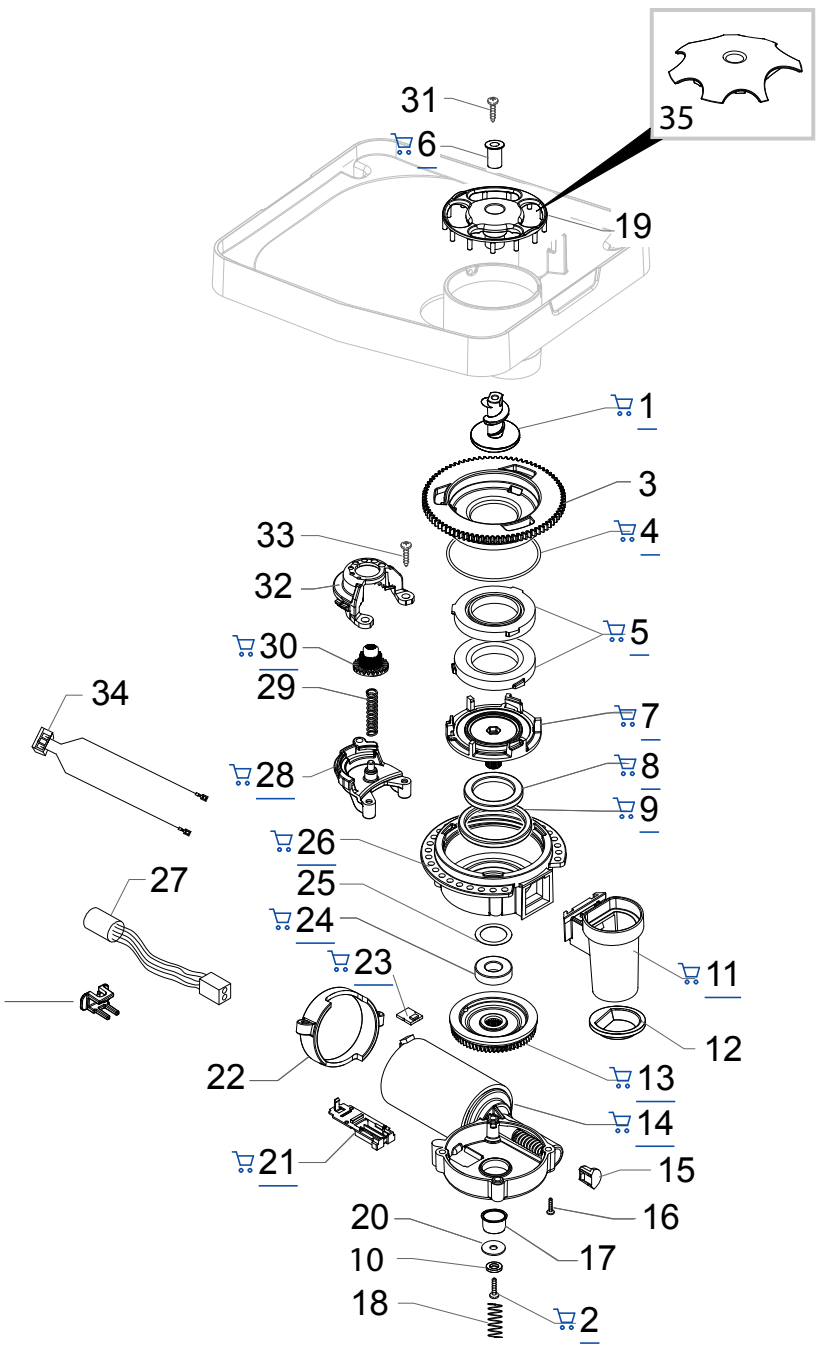

PHILIPS

Saeco

HD8833/11-12-13-14-15-16

HD8833/18-19-31-39-47

CE

Cod.10003553-3554-3555-3556-3557-3558

Cod.10003614-3765-3826-3827-3889

	POS	CODE	12NC	DESCRIPTION	NOTE
🛒	01	11010031	996530005586	TEA/ZAMA INCREASE SCREW GRINDER	
		11024208	996530066712	TEA SHORT ZAMA INCREASE SCREW GRINDER	USA UL
🛒	02	129574802	996530012928	SCREW TCB TORX 20 M4X30 ZN-B	
	03	149198250	996530017951	BLK UPPER COFFEEGRINDER GRINDER SUPPORT	
🛒	04	140328960	996530013577	OR ORM 0530-15 NBR FDA	
🛒	05	146520100	996530016342	BAKED CLAY GRINDER 48X28	
🛒	06	11012466	996530006412	BRASS BUSH BEAN CONT.FINGER PROTEC.P0057	
🛒	07	149198350	996530017952	BLK LOWER COFFEEGRINDER GRINDER SUPPORT	
🛒	08	123030300	996530011183	AXIAL BEARING EKKO 342.35252	
🛒	09	140360500	996530013597	FELT RING 45,4X39,4X4	
	10	128310402	996530012341	GALV.WASHER UNI 8842 A4	
🛒	11	11026355	996530068049	BLK GROUND COFF.OUTLET CONVEYOR V4 ASSY.	
	12	11030459	996530072511	GRY GROUND COFFEE CONT.LOWER SEAL SMART1	
🛒	13	226000300	996530029609	GEAR SX Z=38 FOR GRINDER MOTION ASSY.	
🛒	14	11000513	996530000317	MOTOR COFFEEGRINDER V3.1 230V ASSY.	230V
		11000511	996530000315	MOTOR COFFEEGRINDER V3.1 120V ASSY.	120V
	15	149214800	996530018139	MC V3 MOD=1,25 WORM SCREW CENTRING CAP	
	16	129661702	996530012992	SCREW TCB TORX 3,5X30 PLAST.ZN-B	
	17	11002873	996530001389	INSULATOR BUSH FOR GRINDER MOTOR P124	
	18	11000597	996530000376	COFFEE GRINDER SUPPORT SPRING P124	
	19	11014285	996530007058	BLK V2 BEAN CONTAIN.FINGER PROTECT.P0057	
	20	128381902	996530012375	STEEL FLAT WASHER DI=4,3 DE=14 SP=1,5	
🛒	21	149199050	996530017963	BLK SENSOR SUPPORT FOR COF.GRINDER MOTOR	
	22	11000194	996530000115	BLACK COFFEEGRINDER MOTOR SUPPORT P124	
🛒	23	181540900	996530022784	ELECTR.BOARD WITH SENSOR HAL506 SF-K	
🛒	24	123030200	996530011182	RADIAL BEARING 61900.2RS1	
	25	128381800	996530012374	STEEL CRINKLE WASHER 21,8X14X0,25	
🛒	26	142905450	996530015258	BLK UPPER BODY WITH COFFEE GROUND OUTLET	
	27	11008871	996530005073	3 POLES CONNECTOR MC SENSOR S0053 UL	
🛒	28	11002613	996530001314	LOWER COFFEEGRINDER GEAR SUPPORT P124	
	29	11002572	996530001308	COFFEEGRINDER REGULATION SPRING P124	
🛒	30	11003784	996530001907	COFFEE GRINDING ADJUSTMENT GEAR P0049	
	31	U043.004	996530061808	ZN-B TCB SCREW M4X16	
	32	11002508	996530001296	UPPER COFFEEGRINDER GEAR SUPPORT P124	
	33	129914002	996530013165	SCREW TCB TORX 10 3,5X16 PLAST.ZN-B	
	34	11008869	996530005071	2P.CONNECT.COFFEE GRINDER MOTOR S0053	
	35	11022841	996530007463	TRANS.BEAN CONTAIN.FINGER PROTECT.XSM UL	USA UL

POS	CODE	12NC	DESCRIPTION	NOTE
36	17001921	996530072477	BLK WIRING FIX INSERT FOR GRINDER BOARD	
100	11006059	996530003327	GEN.MOTOR COF.GRINDER STD P0057 230V ASS	230V
101	11013028	996530006587	GEN.MOTOR COFF.GRINDER P0057 120V ASSY.	120V
102	11024242	996530066713	GEN.MOTOR COF.GRINDER V3 P0057 120V ASSY	USA UL

Щоб переглянути та придбати необхідну запчастину, натисніть на її номер на малюнку, або на її номер, назву у таблиці з позначкою 🛒

Exp. E74157 Rev.04 - 22/10/12

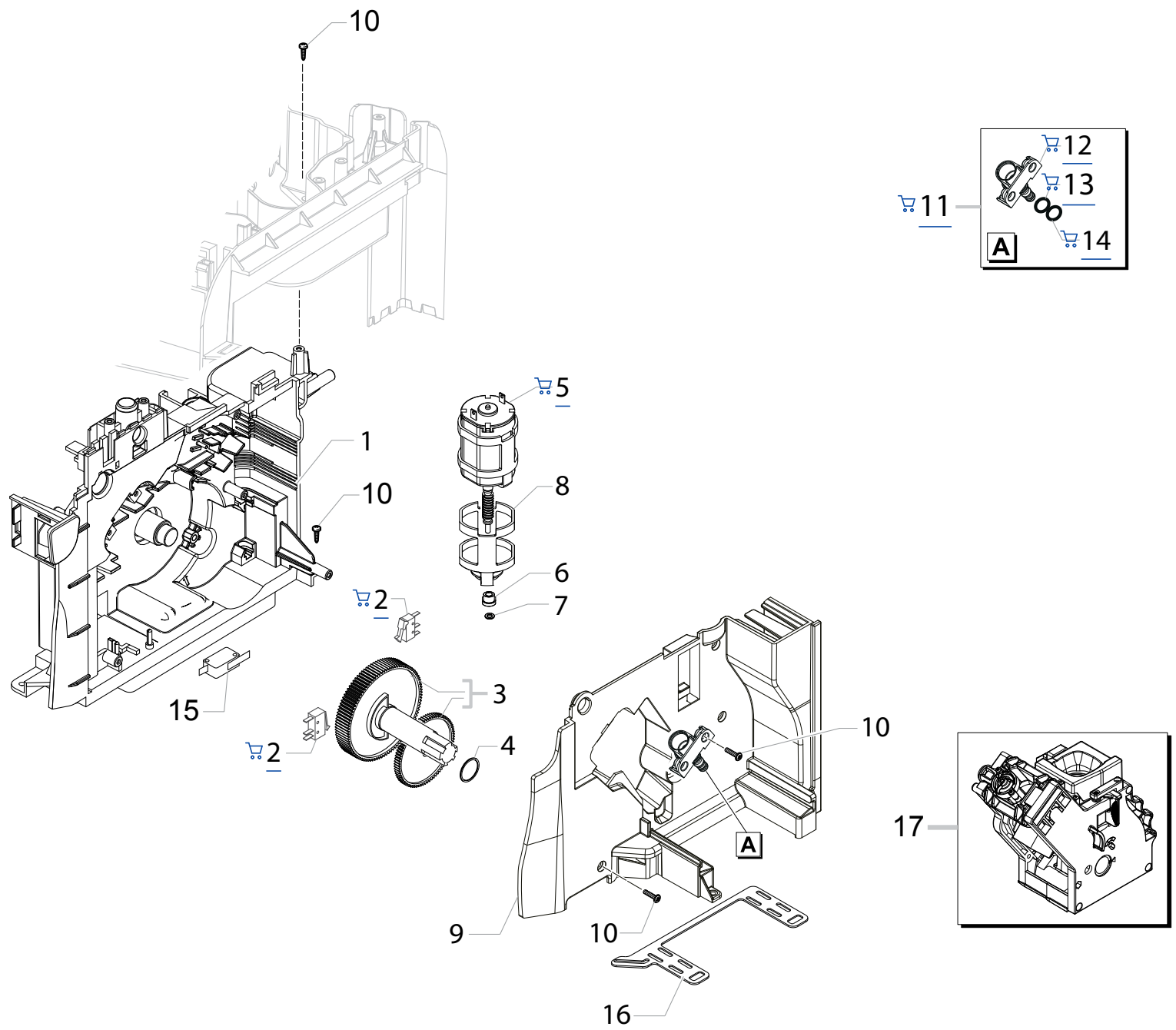

PHILIPS

Saeco

HD8833/11-12-13-14-15-16

HD8833/18-19-31-39-47

CE

Cod.10003553-3554-3555-3556-3557-3558

Cod.10003614-3765-3826-3827-3889

POS	CODE	12NC	DESCRIPTION	NOTE
01	17000366	996530066736	BLK RATIOMOTOR MOUNTING PLATE XSMC ASSY.	
🛒 02	NE05.038	996530058869	MICROSWITCH SAIA XCG5-81-P5	
03	20000900	996530009913	SPARES KIT GEARS FOR RATIOMOTOR V2	
04	9161.132	996530050569	MYLAR WASHER FOR RATIOMOTOR	
🛒 05	11005214	996530002796	MOTOR FOR RATIOMOTOR P124 ASSY.	
06	9121.046	996530049898	BRONZE SINTERED BUSH FOR MOTOR RATIOMOT.	
07	148380200	996530017424	BAKELIZZATE WASHER D=5,5	
08	9121.044	996530049896	ANTIVIBRATION FOR MOTOR	
09	11003754	996530001899	BLK RATIOMOT.MOUNTING PLATE COVER P0057	
10	12001728	996530070321	SCREW TCBR TORX 10 3,5X12 PLAST.SS	
🛒 11	11013531	996530006805	PIN FOR FLOW SELECTOR FAUCET P0057 ASSY.	
🛒 12	11013530	996530006804	PIN FOR FLOW SELECTOR FAUCET V2 P0057	
🛒 13	NM01.035	996530059399	OR ORM 0090-20 SILICONE	
🛒 14	NM01.057	996530059419	OR ORM 0050-20 IN SILICONE	
15	12001644	996530072978	MICROSWITCH SEGNAL XG/V3D/S10	
16	11013205	996530006688	BLACK SEAL FOR RATIOMOTOR PLATE XSM	
17	11012382	996530006384	BLACK BREW UNIT 8GR.5BAR P0057	
			SEE EXP.CODE E90067 NEXT PAGE	

POS	CODE	12NC	DESCRIPTION	NOTE

Щоб переглянути та придбати необхідну запчастину, натисніть на її номер на малюнку, або на її номер, назву у таблиці з позначкою 🛒

Exp.E90067

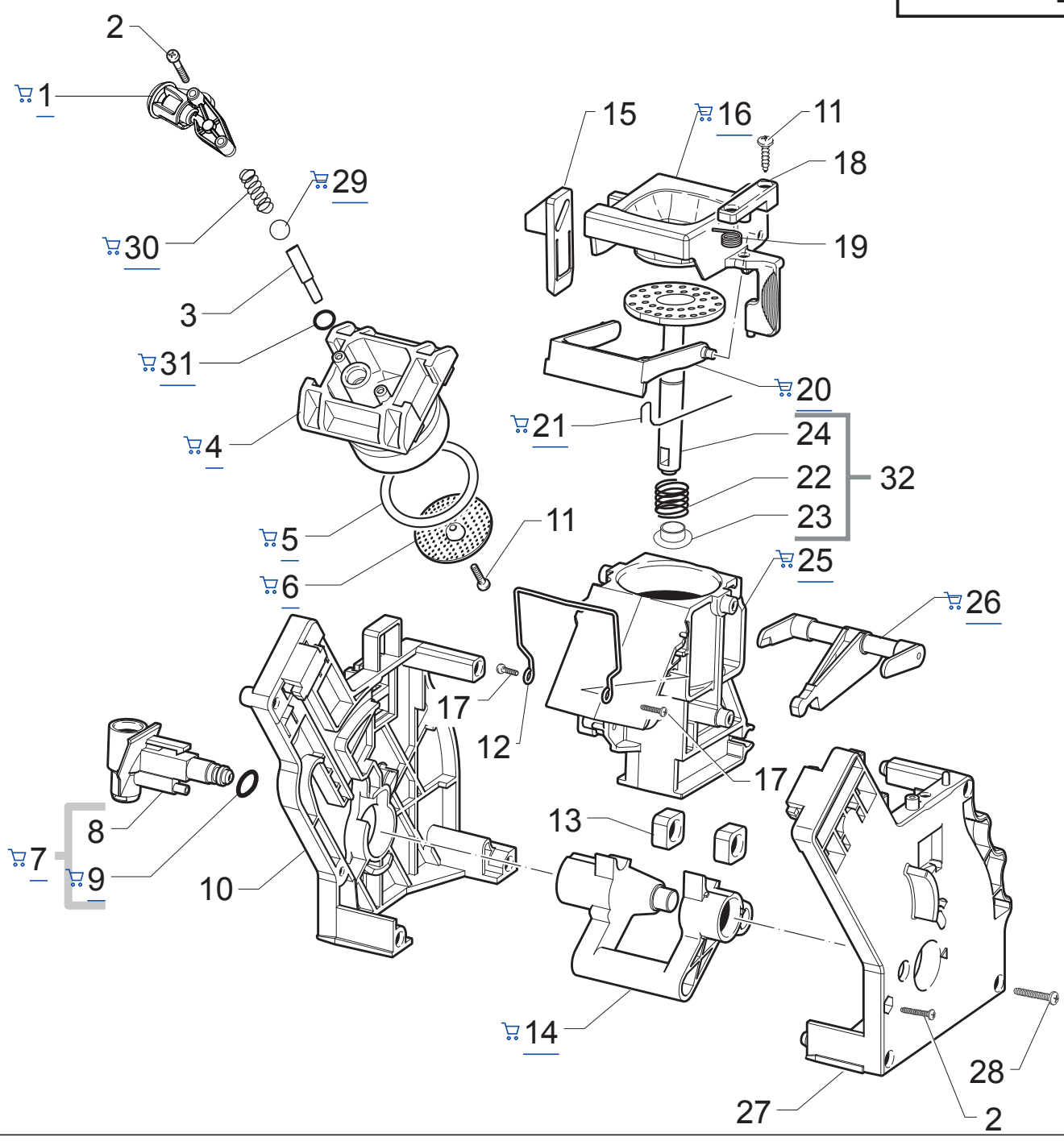

Saeco INTERNATIONAL GROUP

CE

Cod. 11012382

	POS	CODE	12NC	DESCRIPTION	NOTE
🛒	01	11009362	996530005415	BLK COF.OUTLET SLEEVE BREW UNIT S0053 AS	
	02	12000550	996530007838	SCREW TCB TORX 10 3X25 PLAST.SS	
	03	11009276	996530005372	BLK COUNTER PISTON TUBE BREW UNIT S0053	
🛒	04	11001840	996530001046	BLACK COUNTER PISTON BREW UNIT 8GR.P124	
🛒	05	NM01.044	996530059406	OR ORM 0320-40 SILICONE PTFE/FDA	
🛒	06	9161.268	996530050709	PERCOLATOR DE=35,8 ELFO	
🛒	07	20000440	996530009825	BLACK WATER INLET SLEEVE BREW UNIT ASSY.	
	08	9161.064.050	996530050488	BLACK WATER INLET SLEEVE BREW UNIT ROYAL	
🛒	09	NM02.007	996530059441	OR 2025 IN TERMOIL	
	10	9161.375.050	996530050832	BLACK BREW UNIT REAR PLATE SMART	
	11	12000895	996530007951	SCREW TSP TORX 10 3X10 PLAST.SS	
	12	11001556	996530000898	SS BREW UNIT SPRING H=49 SMART	
	13	9161.094.050	996530050539	BLACK BREW UNIT DRILLED BLOCK	
🛒	14	9161.066.050	996530050492	BLACK BREW UNIT ELBOW SHAFT M5000	
	15	9161.373.050	996530050827	BLACK BREW UNIT COUPLING PLATE SMART	
🛒	16	149261350	996530018241	BLACK HOPPER DOSER BREW UNIT SMART1	
	17	129912521	996530013148	SCREW TCBR TORX 10 3,5X14 PLAST.SS	
	18	9161.374.050	996530050829	BLK BREWUNIT HOPPER BLOCKING PLATE SMART	
	19	9161.378	996530050838	SS HOPPER SPRING FOR BREW UNIT SMART	
🛒	20	11004161	996530002096	BLACK SCRAPER FOR BREW UNIT M5000	
🛒	21	9161.046	996530050455	SS SCRAPER SPRING FOR BREW UNIT	
	22	9161.198	996530050627	SS.8GR.BREW UNIT PISTON SPRING	
	23	9161.191	996530050618	WHITE 8GR.-12GR.BREW UNIT PISTON BUSH	
	24	11003077	996530001451	BLK BREW UNIT INTEGRAL PISTON 8GR.ASSY.	
🛒	25	11003075	996530001448	BLACK COFFEE CONTAINER BREW UNIT P124	
🛒	26	11003078	996530001452	BLACK CONNECTING ROD BREW UNIT 8GR.	
	27	11005920	996530003228	BLACK BREW UNIT FRONT PLATE S/SCR.SMART	
	28	12000897	996530007953	SCREW TCB TORX 10 3,5X20 PLAST.SS	
🛒	29	9991.168	996530051874	GLASS SPHERE D.5 MM	
🛒	30	11012095	996530006305	SS COFFEE UNIT CONTERPISTON SPRING S0053	
🛒	31	140328761	996530013575	OR ORM 0060-15 TERMOIL	
	32	11023086	996530007577	BLK 8GR.BREW UNIT NTEGR.PISTON GEN.ASSY.	
		11012382	996530006384	BLACK BREW UNIT 8GR.5BAR P0057	

POS	CODE	12NC	DESCRIPTION	NOTE

Saeco INTERNATIONAL GROUP

BLACK BREW UNIT 8 GR.5 BAR