Щоб переглянути та придбати необхідну запчастину, натисніть на її номер на малюнку, або на її номер, назву у таблиці з позначкою

Exp. E74105 Rev.04

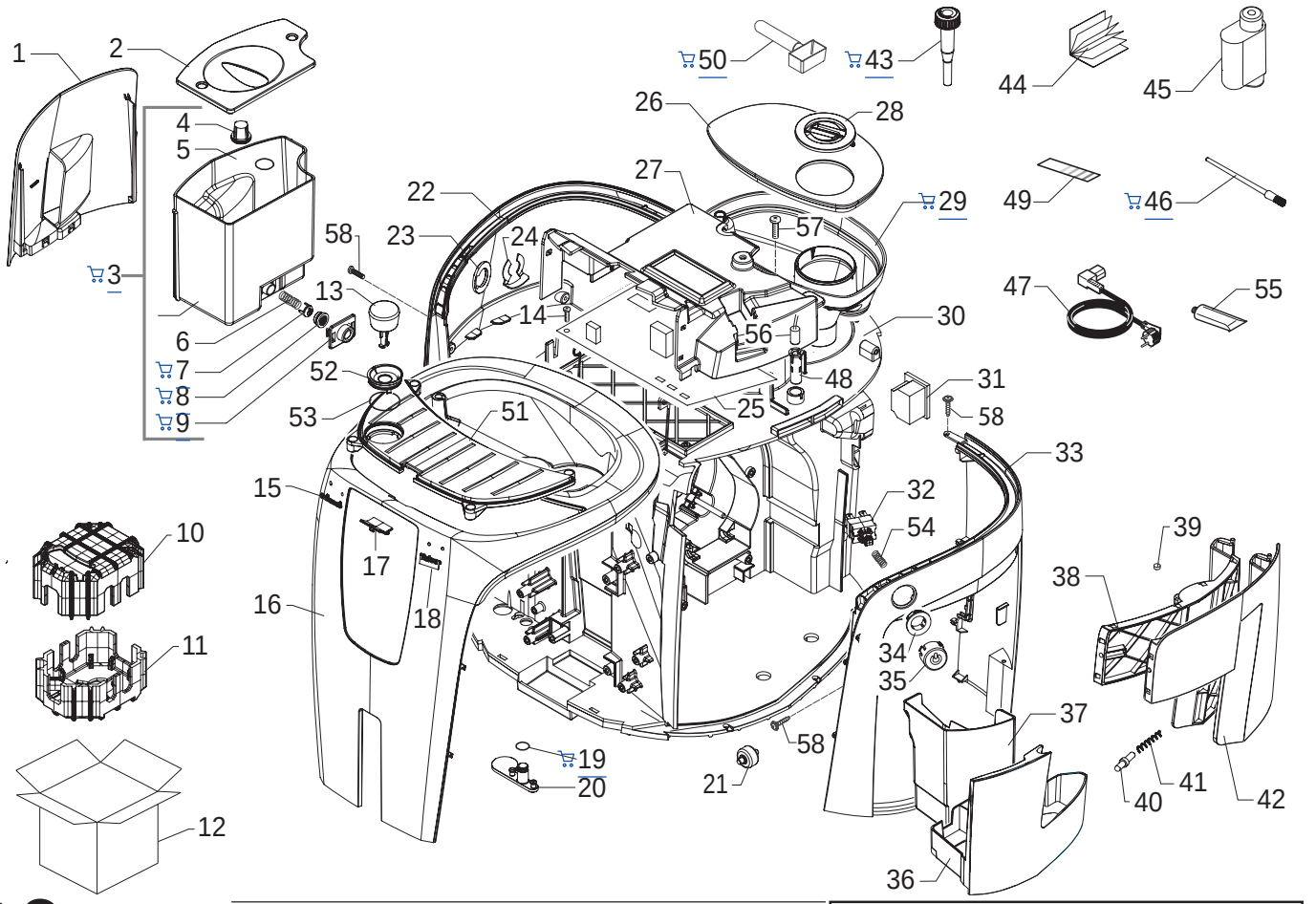

Saeco INTERNATIONAL GROUP

SUP032AR

Cod. 10000226-243-1562-1563 1564-1565-1566-1568-1569-1760

POS	CODE	DESCRIPTION	NOTE
01	11004088	TITANIO WATER TANK OUTLET COVER P0053	
02	11001668	NATURAL/GREY WATER CONTAINER LID P0053	
03	11002017	TRANSPARENT WATER CONTAINER P0053 ASS.	
04	224640200	EXTERNAL FILTER FOR WATER CONTAIN. ASSY	WITH PART. N°05
05	140328461	EPDM OR METRIC 0190-10	
06	11003672	SPRING FOR WATER CONTAINER VALVE P0049	
07	11003673	GREY WATER CONTAINER VALVE INSERT P0049	
08	11003671	TRANSP.VALVE FOR WATER CONTAINER P0049	
09	11001298	BLACK LID FOR DUCKBILL VALVE	
10	13000141	UPPER TECHMATE INSERT FOR BOX P0053	
11	13000140	LOWER TECHMATE INSERT FOR BOX P0053	
12	13000391	DISPLAY BOX V2 SAECO P0053	
13	11004057	CHROMED WATER-STEAM KNOB P0053	
14	129913202	SCREW TCB TORX 10 3X8 PLAST.ZN-B	
15	11004142	SILVER PLATE LOGO SAECO NEW P0049/P0053	
16	11004068	SPECCHIATO COVER WITH OPEN P0053	
17	11002096	TRANSPLATE INFRAREDS PLATE P0053	
18	11004923	BLACK PLATE WITH LOGO TALEA P0053 TOUCH	
19	140321461	OR 2018 IN EPDM	
20	11003821	BLACK CAP FOR CONNECTIONS P0049/P0053	
21	11000223	BLACK WHEEL FOR CASING BOTTOM P124	
22	11004059	TITANIO LEFT SIDE CASING P0053	
23	11001624	STEAM TUBE WASHER P0049	
24	NF11.084	FOLK SPRING	
25	11001360	PWR BOARD P0049/P0053	230V
	11003968	PWR BOARD P0049/P0053	120V
26	11002030	TRANSPAR.BEAN COFF.CONTAIN.LID ASS.P0053	
27	11003783	BLACK POWER BOARD PROTECTION P0053/D	
28	11001670	NATUR/GREY GROUND COF.CONTAIN.LID P0053	
29	11001662	NATURAL/GREY BEAN CONTAINER P0053	
30	11002016	MOUNTING PLATE ASSY.WITH PIN P0053	
31	12000280	CUP SOCKET EN 60320 C 13	
32	11007060	GENERAL SWITCH FOR P124	
33	11004067	TITANIO RIGHT SIDE CASING P0053	
34	11004055	TITANIO ON-OFF BUTTON INSERT P0049	
35	11004056	CHROMED ON-OFF SWITCH BUTTON P0049	
36	11004083	TITANIO DRIP TRAY COFFEE UNIT P0053	
37	11003533	BLACK DUMP BOX P0049 W/OUT S.CREEN ASSY.	
38	11001659	BLACK INSIDE COVER DOOR P0053	
39	9161.111	MAGNET FOR FLOAT SUPERAUTOM.	
40	11001340	BLACK DOOR PIN P0049	

POS	CODE	DESCRIPTION	NOTE
41	11008956	SS SPRING FOR LOCK DOOR G0053	
42	11004085	TITANIO DOOR P0053	
43	11003785	BLACK GRINDER ADJUSTMENT KEY P0049	
44	15001371	MANUAL INSTRUCTI.V2 SAECO P0053/D D/I	
	15001372	MANUAL INSTRUCTI.V2 SAECO P0053/D E/P	
	15001373	MANUAL INSTRUCTI.V2 SAECO P0053/D GB/F	
	15001374	MANUAL INSTRUCTI.V2 SAECO P0053/D NL/PL	
45	21000961	ACC SAE BRITA WATER FILTER 1 UNIT EUR	
46	127390100	BRUSH FOR CLEANING	
47	183930650	PO.CABL.CH BLACK 3X1 H05VV-F L=1200	
	183911050	POWER CABLE SCHUKO BLACK L=1200	
	183921950	POWER CABLE SJT3 USA BLACK UL L=1200	
	183940650	BLACK POWER CABLE AUST.3X1 H05VVF L=1200	
	11001985	BLACK POWER CABLE KOREA 3X1,25 L=1200	
	11004245	BLACK POWER CABLE BRAZIL W/CONECT.L=1200	
	11004246	BLACK POWER CABLE TAIWAN HVCTF L=1200	
	11004247	BLACK POWER CABLE RVV 3X1 CHINA L=1200	
	183980650	POWER CABLE JAPPON VCTF BLACK L=1200 MM	
48	11003154	BLACK REED SENSOR SUPPORT P0049	
49	0301.961	WATER HARDNESS TEST	
50	146680850	BLACK COFFEE MEASURE SMART	
51	11008955	SILVER CUPWARMING LID V2 P0053 ASSY.	230V
	11005723	SILVER CUPWARMING LID P0053 UL ASSY.	120V
52	11004303	SILVER WARM CUPS FINGER PROTECT. P0053	
53	140329461	EPDM OR 2137	
54	11005040	SPRING FOR ON-OFF BUTTON P0049	
		UP TO S/N. 9007SA40256419	
55	11005044	SAECO KLUBER TRIBOSTAR SIL 2 TUBE 5GR.	
56	11003889	2POLES CONNECT. SENSOR REED DOOR P0049	
57	129661702	SCREW TCB TORX 3,5X30 PLAST.ZN-B	
58	129914102	SCREW TSP TORX 10 3,5X12 PLAST.ZN-B	

Щоб переглянути та придбати необхідну запчастину, натисніть на її номер на малюнку, або на її номер, назву у таблиці з позначкою

Exp. E74105 Rev.04

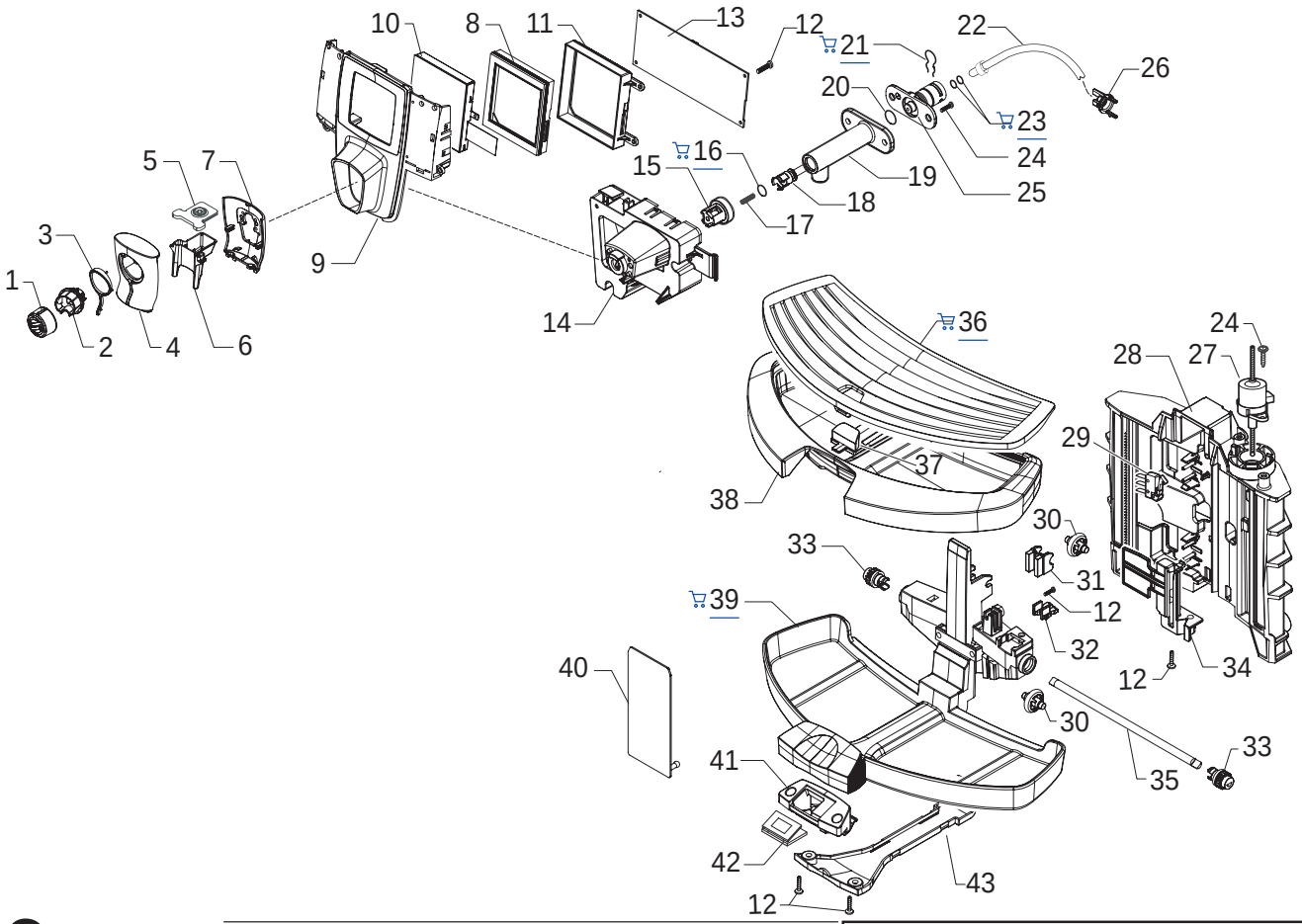

Saeco INTERNATIONAL GROUP

SUP032AR

CE

Cod. 10000226-243-1562-1563 1564-1565-1566-1568-1569-1760

POS	CODE	DESCRIPTION	NOTE
01	11007378	CHR/PLAT.CREAM ADJUSTM.KNOB V2 P124 ASSY	
02	11007420	INTERNAL CONNECT.V2 FOR COFFEE DISPENS.	
03	11002110	AMBRA COFFEE DISPENSER LENS P0053	
04	11004208	CHROMED FRONT COFFEE DISPENSER COVER	
05	11002111	BLACK CAP COFFEE DISPEN.HEAD BODY P0053	
06	11002049	BLACK COFFEE DISPENSER BODY P0053	
07	11004119	CHROMED REAR COFFEE DISPENSER COVER	
08	11002046	TRANSPAR. DISPLAY SUPPORT SEAL P0053/D	
09	11004101	SPECCHIATO FRONT PANEL P0053/D	
10	12000163	DISPLAY VL 160160 P0053/D	
11	11002045	BLACK DISPLAY SUPPORT P0053/D	
12	129913202	SCREW TCB TORX 10 3X8 PLAST.ZN-B	
13	11004843	AS.CPU+SW V1 P0053/D	
		UP TO S/N. 9007SA40267296	
	11008085	CPU+SW AS.V2 P0053/D	
		FROM S/N. 9007SA40267297	
14	11002112	BLACK BROW SUPPORT P0053	
15	149198700	SUPPORT CREAM ADJUSTMENT SHAFT	
16	140326661	OR METRIC 0040-20 IN EPDM	
17	126772518	SPRING FOR CREAM ADJUSTMENT SHAFT	
18	140640200	CREAM ADJUSTMENT SHAFT	
19	11000290	BLACK COFFEE DISPENSER TUBE P124	
20	12000070	OR METRIC 0060-15 IN SILICONE	
21	9011.144	FORK FOR TUBE D.4	
22	11001766	TEFLON TUBE 2X4 L=125 MM ASSY	
23	140328059	OR 2015 IN SILICONE PTFE/FDA	
24	12000450	SCREW TORX T10 3,5X12 UNI9786 GALVANIZED	
25	11002130	FAST LOCK CONNECT. FOR EROGATOR P0053	
26	11001337	BLACK TUBE TEFLON INSERT P0049	
27	12000065	SAIA UCB MOTOR FOR P124 MOBILE TRAY	
28	11002204	BLACK DRIP TRAY GUIDE P0053	
29	11000662	MICROSWITCH DRIP TRAY P124 ASSY.	230V
	11004447	MICROSWITCH DRIP TRAY P124 UL ASSY.	120V
30	11000113	BLACK WHELL FOR DRIP TRAY SUPPORT P124	
31	11000224	INSERT FOR ADJUSTMENT TRAY WHEEL P124	
32	11000115	FIXING PLATE FOR FEEDING SCREW P124	
33	11000081	GEAR Z=17 FOR MOBILE TRAY SUPPORT P124	
34	11002293	BLACK LOWER DRIP TRAY PROT.SUPPORT P124	
35	11000586	MOBILE DRIP TRAY GEARS SHAFT P124	
36	11004095	SPECCHIATO GRATE FOR DRIP TRAY P0053	
37	11004185	AMBRA FLOAT FOR DRIP TRAY P0049	

POS	CODE	DESCRIPTION	NOTE
38	11009635	CARBONA DRIP TRAY P0053	
39	11009840	CARBONA DRIP TRAY SUPPORT P0053	
40	11003399	SPECCH. DRIP TRAY SUPPORT PROTECT.P0053	
41	11002184	BLACK SENSOR BOARD SUPPORT P0053/C-D	
42	11000585	MOBILE DRIP TRAY SENSOR BOARD P124	
43	11002181	BLACK COVER FOR SENSOR. CABLES P0053C-D	

Щоб переглянути та придбати необхідну запчастину, натисніть на її номер на малюнку, або на її номер, назву у таблиці з позначкою

Exp. E74105 Rev.04

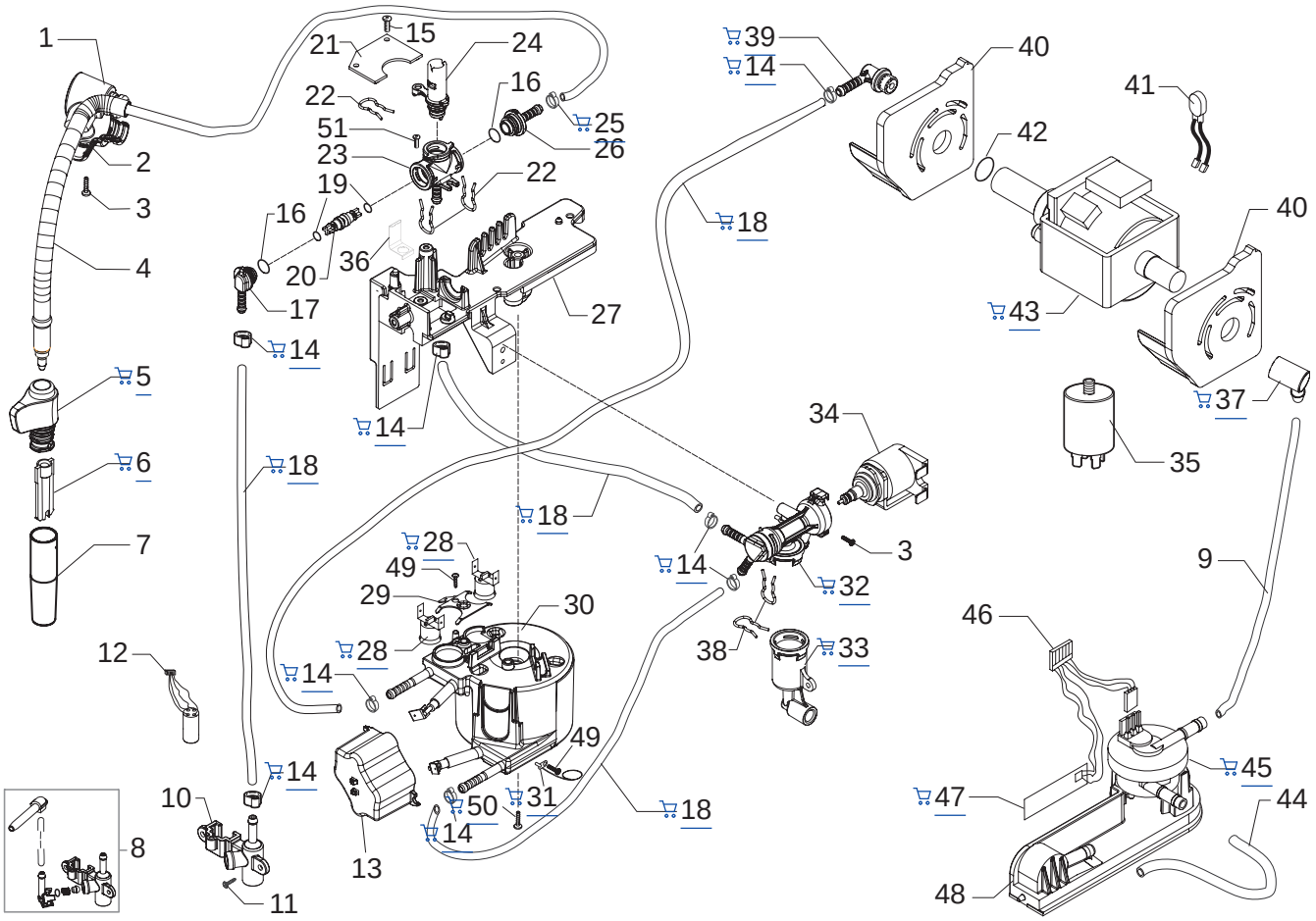

Saeco INTERNATIONAL GROUP

SUP032AR

CE

Cod. 10000226-243-1562-1563 1564-1565-1566-1568-1569-1760

POS	CODE	DESCRIPTION	NOTE
01	11004196	CHROMED UPPER STEAM TUBE COVER P0049	
02	11004197	CHROMED LOWER STEAM TUBE COVER P0049	
03	129912202	SCREW TCB TORX T10 3X12 UNI 9786 ZN	
04	11003122	STEAM TUBE P0049 ASSY.	
05	11001625	STEAM TUBE HANDGRIP P0049	
06	11001620	PANNARELLO INTERNAL TUBE P0049	
07	11001621	STAINLESS STEEL COVER PANNARELLO P0049	
08		PARTICULAR NOT AVAILABLE	SEE PART. N°10
		UP TO S/N. 9007SA40333704	
09	149360200	SILICONE TUBE 5X8 70SR	IN ROLL
10	11007421	BLACK CONNECTOR FOR P0054	
		FROM S/N. 9007SA40333705	
11	12000450	SCREW TORX T10 3,5X12 UNI9786 GALVANIZED	
12	11000465	4POLE CONNECTOR FOR P0054	
13	11005284	BLACKBOIL. CONNECTORS COVER P0049/P0053	
14	12000892	OETIKER CLAMP D=9,5 16700004	
15	129913202	SCREW TCB TORX 10 3X8 PLAST.ZN-B	
16	12000931	OR 108 IN EPDM FDA 70 SH	
17	11001544	FAUCET CONNECTOR P0049	
18	16000380	5X8,9 SILICONE TUBE	IN ROLL
19	12000890	OR 2012 IN EPDM FDA 70 SH	
20	11004134	BRASS FAUCET SHAFT P0049	
21	11007569	TAP ELECTRONIC CARD G0053 ASSY.	
22	11001499	FORK SPRING FOR FAUCET P0049	
23	11004625	TEA/BRASS FAUCET CASING P0049	
24	11004135	PLAST/BRASS FAUCET SHAFT P0049 ASSY.	
25	NF11.052	OETIKER CLIP	
26	11001546	FAUCET STRAIGHT CONNECTOR P0049	
27	11001332	SUPPORT FOR BOILER-FAUCET-VALVE P0049	
28	189428600	THERMOSTAT 175° 1NT-08L-5125	
29	11001751	THERMOSTATES SPRING FOR BOILER	
30	11001750	ALUM.BOILER/V3 1300W ASSY.	230V
	11005608	ALUM.BOILER/V3 1300W ASSY.	120V
	11005609	ALUM.BOILER/V3 1300W ASSY.	100V
31	190800100	TEMPERATURE SENSOR NTC UL L=280MM	
32	20000591	BLOWDOWN VALVE CASING P0049 ASSY.	
33	20000592	BLOWDOWN VALVE CONNECTOR P0049 ASSY.	
34	20000590	BLOWDOWN VALVE COIL P0049 ASSY.	230V
	20000680	BLOWDOWN VALVE COIL P0049 ASSY.	120V
	20000681	BLOWDOWN VALVE COIL P0049 ASSY.	100V
	20000920	BLOWDOWN VALVE COIL P0049 ASSY	220V-60HZ
35	12000005	ANTIDISTURB FILTER 10A FNC 1005474103P	230V
	12000007	ANTIDISTURB FILTER 16A FNC 1610474472P	120V
36	11002957	FAUCET SPRING P0049	

POS	CODE	DESCRIPTION	NOTE
37	147920150	90° CONNECTOR PUMP INLET	
38	11005096	FORK SPRING FOR VALVE P0049	
39	11001054	90°CONNECTOR PUMP OUTLET P0049/B	
40	11006296	BLACK PUMP SUPPORT P0049 ASSY.	
41	11005668	2POLES CONNECTOR PUMP P0049 UL	120V-230V
42	140321961	OR 2031 IN TERMOIL	
43	12000140	ULKA PUMP EP5/S GW	230V-50HZ
	12000142	ULKA PUMP EAP5/S 120V-60HZ	
	12000130	ULKA PUMP EP5/S GW 100V-50/60HZ	
	12000167	ULKA PUMP EP5/S GW 240V-50HZ	
	12000182	ULKA PUMP EP5/S GW 220V-60HZ	
44	JS01.022	SILICONE TUBE 5X10 60 SHORE	IN ROLL
45	12000781	TURBINE D=1,2 932-8521/90 ASSY.	
46	11001790	6POLES CONNECT. LEVEL+FLOWMETER P0049	230V
	11005648	6 POLES CONN.LEVEL+FLOWMETER P0049 UL	120V
47	11000651	WATER LEVEL SENSOR BOARD P124	
48	11003670	BLACK TURBINE SUPPORT/V2 P0049	
49	129573202	SCREW TCB PH/TT 4X8 UNI 8112 ZNP	
50	129932502	GALVANIZDE SELF DRILLING SCREW 5X30	
	11008698	TEA/BRASS FAUCET P0049-P0053 ASSY. WITH PART. N°16-17-19-20-22-23-24-26	
	11001543	BLOWDOWN VALVE P0049 230V ASSY.	
	11005604	BLOWDOWN VALVE P0049 120V ASSY.	
	11005751	BLOWDOWN VALVE P0049 100V ASSY.	
	11009021	BLOWDOWN VALVE P0049 220V-60HZ ASSY. WITH PART. N°32-33-34-51	
	11008027	ALUM.BOILER V2 P0053 230V ASSY.	COMPLETE
	11008028	ALUM.BOILER V2 P0053 120V ASSY.	COMPLETE
	11008029	ALUM.BOILER V2 P0053 100V ASSY.	COMPLETE
	11009131	ALUM.BOILER V2 P0053 220V-60HZ ASSY.	COMPLETE

Щоб переглянути та придбати необхідну запчастину, натисніть на її номер на малюнку, або на її номер, назву у таблиці з позначкою

Exp. E74105 Rev.04

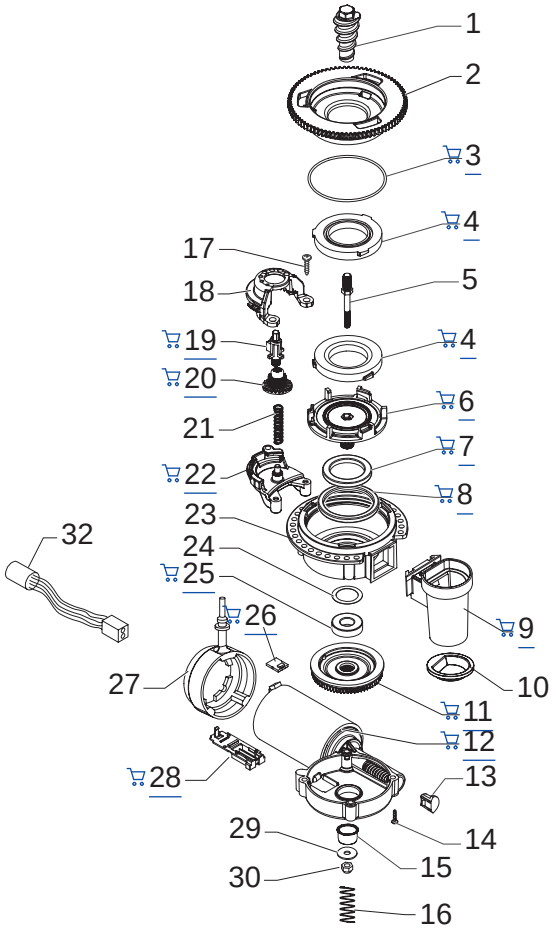

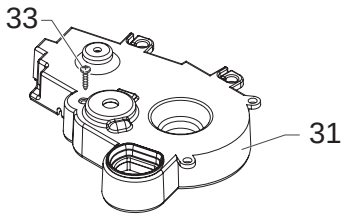

Saeco INTERNATIONAL GROUP

SUP032AR

Cod. 10000226-243-1562-1563 1564-1565-1566-1568-1569-1760

POS	CODE	DESCRIPTION	NOTE
01	9141.001	SCREW OF INCREMENT	
02	149198250	UPPER GRINDER SUPPORT COFFEEGRINDER	
03	140328960	NBR FDA OR METRIC 0530-15	
04	146520100	BAKED CLAY KLAGER GRINDER 48X28	
05	127473603	STEEL PIN M4-M6 FOR INCREMENT SCREW	
06	149198350	LOWER GRINDER SUPPORT COFFEEGRINDER	
07	123030300	AXIAL BEARING EKKO 342.35252	
08	140360500	FELT RING 45,4X39,4X4	
09	222870250	GROUND COFFEE OUTLET CONVEYOR ASSY.	
10	145854462	GROUND COFFEE CONT.SEAL LOWER SMART1	
11	226000300	GEAR SX Z=38 FOR GRINDER MOTION ASSY.	
12	11000513	MOTOR COFFEEGRINDER/V3.1 DOMEL ASSY	230V
	11000511	MOTOR COFFEEGRINDER/V3.1 DOMEL ASSY	120V
	11000512	MOTOR COFFEEGRINDER/V3.1 DOMEL ASSY	100V
13	149214800	CAP FOR WORM SCREW MC/V3 CENTRING	
14	129661702	PANELVIT TCB SCREW 3,5X25 D.7505 ZN	
15	11002873	INSULATOR BUSH FOR GRINDER MOTOR P124	
16	11000597	COFFEE GRINDER SUPPORT SPRING P124	
17	129660102	PANELVIT TCB SCREW 3,5X18 D.7505 Z	
18	11002508	UPPER GEAR SUPPORT COFFEEGRINDER P124	
19	11003446	BLACK INSERT FOR COFFEE GRINDER P0049	
20	11003784	COFFEE GRINDING ADJUSTMENT GEAR P0049	
21	11002572	GRINDER REGULATION SPRING P124	
22	11002613	LOWER GEAR SUPPORT COFFEEGRINDER P124	
23	149205450	SWITCH+SOCKET POWER CABL.SUPP.SMART	
24	128381800	CRINKLE WASHER 21,8X15,8X0,2	
25	123030200	RADIAL BEARING 61900.2RS1	
26	181540900	ELECTRONIC BOARD WITH SENSOR HAL506	
27	11001367	BLACK COFFEE GRINDER SUPPORT P0049	
28	149199050	SENSOR SUPPORT FOR COFF.GRIND.MOTOR	
29	128381902	GALVAN.FLAT WASH.DI=4,3 DE=14 SP=1,5	
30	123453102	SELF LOCK NUT M4 DIN 982 HIGH GALV.	
31	11001826	SOUNDPR. COVER FOR COFGRINDER P0053	
32	11005658	5POLES CONNECTOR MC SENSORS P0049 UL	100V÷230V
33	129661902	TCB SCREW 3,5X18 PLASTITE 45°	
	11007416	GENERAL MOTOR MC V2 P0049 230V ASSY.	
	11007417	GENERAL MOTOR MC V2 P0049 120V ASSY.	
	11007418	GENERAL MOTOR MC V2 P0049 100V ASSY.	

POS	CODE	DESCRIPTION	NOTE

Щоб переглянути та придбати необхідну запчастину, натисніть на її номер на малюнку, або на її номер, назву у таблиці з позначкою

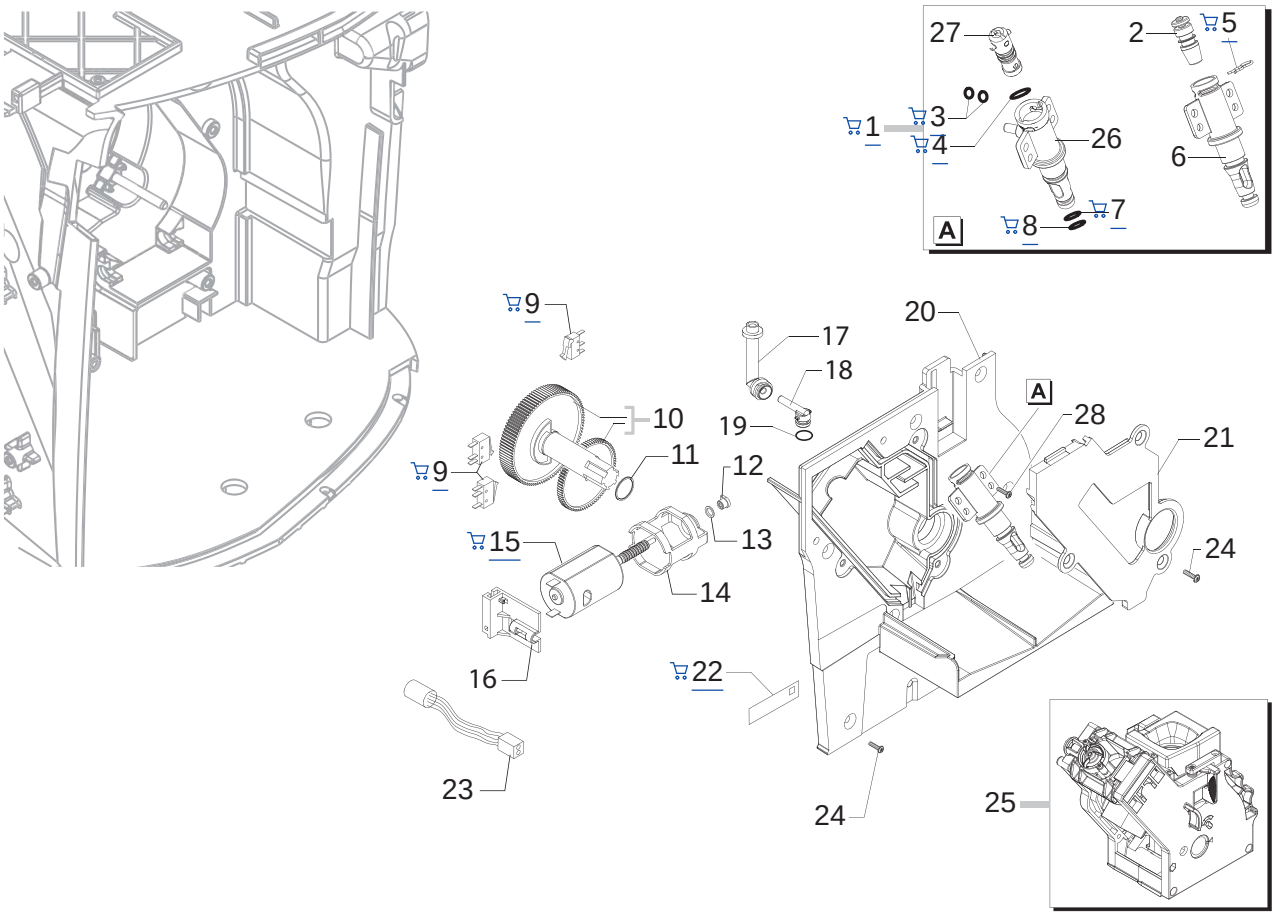

Saeco INTERNATIONAL GROUP

SUP032AR

CE

Cod. 10000226-243-1562-1563 1564-1565-1566-1568-1569-1760

POS	CODE	DESCRIPTION	NOTE
01	11005113	PIN V2 FOR BOILER P049/B ASSY.	
02	11000692	NIKELED BRASS CAP FOR PIN BOILER P119	
		UP TO S/N. 9007SA40012603	
03	140328059	OR 2015 IN SILICONE PTFE/FDA	
04	140324459	OR METRICO 0060-20 SILICON.PTFE/FDA	
05	9011.144	FORK FOR TUBE D.4	
		UP TO S/N. 9007SA40012603	
06		PARTICULARE NOT AVAILABLE	SEE PART. N°01
		UP TO S/N. 9007SA40012603	
07	NM01.035	OR ORM 0090-20 SILICONE	
08	NM01.057	OR ORM 0050-20 SILICONE	
09	NE05.038	MICROSWITCH	
10	20000455	SPARES KIT GEARS FOR RATIOMOTOR P124	
		UP TO S/N 9007SA40267296	
	20000900	SPARES KIT GEARS FOR RATIOMOTOR V2	
		FROM S/N 9007SA40267297	
11	9161.132	MYLAR WASHER FOR RATIOMOTOR	
12	9121.046	SINTERED BUSH FOR MOTOR	
13	148380200	WASHER BAKELIZZATE D=5,5	
14	9121.044	ANTIVIBRATION FOR MOTOR	
15	11003037	MOTOR FOR RATIOMOTOR ASSY.	
16	11001331	BLACK MICROSW. SUPPORT DUMP BOX P0049	
17	11004086	VALVE DESCARGING WATER 90° CONNECTOR	
18	11003648	COVER DESCARGING WATER 90° CONNECTOR	
19	140325462	OR METRIC 0070-20 IN SILICONE	
20	11006337	BLACK COVER FOR MOUNTING PLATE P0049 AS	
21	11001312	BLACK COVER FOR VAIN BOILER P0049	
22	11000651	WATER LEVEL SENSOR BOARD P124	
23	11003661	REED SENSOR MK3-1A66-BV16451	
24	129914102	SCREW K 35X12 WN 1423 GALVANIZED	
25	11002145	BLACK BREW UNIT 8GR. P124/SBS	
		SEE COD. EXP. E90042	
26	11003801	PIN V2 FOR BOILER P119	
		FROM S/N. 9007SA40012604	
27	11003820	CAP V2 FOR PIN BOILER P119	
		FROM S/N. 9007SA40012604	
28	129661902	TCB SCREW 3,5X18 PLASTITE 45°	

POS	CODE	DESCRIPTION	NOTE